October 29, 2026
Version 1.0

Hilltip

Ice STRIKER™

PARTS LIST

LION 6-12 HYDRAULIC/ELECTRIC COMBI SPREADER

This manual replaces all editions with an earlier date.

TABLE OF CONTENTS

Spreader assembly 3-4
Lower chute assembly, electric 5
Lower chute assembly, hydraulic 6
Spinner plate pre-assembly 7
End of material sensor kit, optional 7
Spreader rear cabinet pre-assembly 8
Invert vee kit, LION 6-8 short 9
Invert vee kit, LION 8 long, 10 short 9
Invert vee kit, LION 9, 10 long, 12 10
Cover plate for hydraulic gearbox 10
Pre-assembled bottom, chain, LION 6-8 short, hydraulic/electric 11
Pre-assembled bottom, dual auger, LION 6-8 short, hydraulic 12
Pre-assembled bottom, dual auger, LION 6-8 short, electric 12
Pre-assembled bottom, chain, LION 8 long, 10 short, hydraulic/electric 13
Pre-assembled bottom, chain, LION 9, 10 long, 12, hydraulic/electric 14
Pre-assembled bottom, dual auger, LION 9, 10 long, 12, hydraulic 15
Pre-assembled bottom, dual auger, LION 9, 10 long, 12, electric 15
Protective tarpaulin system, Lion 6 16
Protective tarpaulin system, Lion 7 17
Protective tarpaulin system, Lion 8 short 18
Protective tarpaulin system, Lion 8 long 19
Protective tarpaulin system, Lion 9 20
Protective tarpaulin system, Lion 10 short 21
Protective tarpaulin system, Lion 10 long 22
Protective tarpaulin system, Lion 12 23
Electric tarp system, optional 23
Side extension Lion 6 → 7 + 175 mm 24
Side extension Lion 6 → 8 short + 350 mm 24
Side extension Lion 8 long → 10 short + 350 mm 25
Side extension Lion 9 → 10 long + 175 mm 25
Side extension Lion 9 → 12 + 350 mm 26
Pre-assembled 2 section hydraulic valve 12V/24V 26
Pre-assembled 3 section hydraulic valve 12V/24V 27
Pre-assembled 4 section hydraulic valve 12V/24V 27
Flip down ladder, optional 28
Chute mounted dual spray bar kit, optional 29
Dual spray bar assembly, optional 29
Slurry kit, optional 30
Hand rail kit, optional 31
Additional front tanks, optional 32
Electrical harnesses 32
Connectors 31-35

SPREADER ASSEMBLY

Item	Qty	Part no.	Description	Notes
1	1	H45550	Pre-assembled bottom, chain, LION 6-8 short, hydraulic/electric	
	1	H49616	Pre-assembled bottom, dual auger, LION 6-8 short, hydraulic	
	1	H50240	Pre-assembled bottom, dual auger, LION 6-8 short, electric	
	1	H50237	Pre-assembled bottom, chain, LION 8 long, 10 short, hydraulic/electric	
	1	H50238	Pre-assembled bottom, dual auger, LION 8 long, 10 short, hydraulic	
	1	H50241	Pre-assembled bottom, dual auger, LION 8 long, 10 short, electric	
	1	H49200	Pre-assembled bottom, chain, LION 9, 10 long, 12, hydraulic/electric	
	1	H50239	Pre-assembled bottom, dual auger, LION 9, 10 long, 12, hydraulic	
	1	H50242	Pre-assembled bottom, dual auger, LION 9, 10 long, 12, electric	
2	1	H45770	Spreader rear cabinet, pre-assembled	
3	1	H49216	Spreader side RL welded, without pre-wet	
4	1	H49217	Spreader side RR welded, without pre-wet	
5	1	H49218	Spreader side CL welded, without pre-wet	
6	1	H49219	Spreader side CR welded, without pre-wet	
7	1	H50259	Spreader side half left welded, without pre-wet, LION 8 long, 10 short	
	1	H49220	Spreader side FL welded, without pre-wet, LION 9, 10 long, 12	
8	1	H50260	Spreader side half right welded, without pre-wet, LION 8 long, 10 short	
	1	H49221	Spreader side FR welded, without pre-wet, LION 9, 10 long, 12	
9	1	H45672	Front module welded	
10	2	H45763	Tie-down bracket	
11	4	H45745	Cross beam net support, LION 6-8 short	
	5		Cross beam net support, LION 8 long, 10 short	
	6		Cross beam net support, LION 9, 10 long, 12	
12	1	H45693	Chute flip bracket welded	
13	2	H45907	Pre-assembled lock clamp	
14	8	H45724	Side support welded, LION 6-8 short	
	10		Side support welded, LION 8 long, 10 short	
	12		Side support welded, LION 9, 10 long, 12	
15	4	H45913	Bracket, LION 6-8 short	
	6		Bracket, LION 8 long, 10 short	
	12		Bracket, LION 9, 10 long, 12	
16	1	H46230	Invert vee kit LION 6-8 short	
	1	H50267	Invert vee kit LION 8 long-10 long	
	1	H49224	Invert vee kit LION 9, 10 long, 12	
17	1	H45909	Front rubber bracket	
18	1	H30317	Vibrator 12V 200kg	
	1	H30323	Vibrator 24V 200kg	
19	5	H45677	Bed cross beam, LION 6-8 short	
	6		Bed cross beam, LION 8 long-10 long	
	7		Bed cross beam, LION 9, 10 long, 12	
20	1	H45716	Stopper bracket left	
21	1	H45719	Stopper bracket right	
22	1	H46322	Protective tarpaulin system, Lion 6	Optional
	1	H50100	Protective tarpaulin system, Lion 7	Optional
	1	H49375	Protective tarpaulin system, Lion 8 short	Optional
	1	H50101	Protective tarpaulin system, Lion 8 long	Optional
	1	H46323	Protective tarpaulin system, Lion 9	Optional
	1	H50104	Protective tarpaulin system, Lion 10 short	Optional
	1	H50102	Protective tarpaulin system, Lion 10 long	Optional
	1	H50103	Protective tarpaulin system, Lion 12	Optional
23	4	H45630	Rubber stopper	
24	1	H49150	Lower chute assembly, electric	
	1	H45430	Lower chute assembly, hydraulic	

See drawing on next page →

SPREADER ASSEMBLY

Item	Qty	Part no.	Description	Notes
25	1	H45697	Top chute welded	
26	1	H46240	Chute drop cover	
27	10	H46253	Bolt holder plate, LION 6-8 short	
	12		Bolt holder plate, LION 8 long, 10 short	
	14		Bolt holder plate, LION 9, 10 long, 12	
28	1	H45911	Front rubber	
29	1	H49377	Cable plate angled	
30	2	H45706	Top grid, LION 6-8 short	
	3		Top grid, LION 8 long, 9, 10 long/short, 12	
31	10	H46046	Net holder, LION 6-8 short	
	12		Net holder, LION 8 long, 10 short	
	14		Net holder, LION 9, 10 long, 12	
32	1	H46239	Rear grid support	
33	4	H49223	Center fastening plate, LION 6-8 short	
	5		Center fastening plate, LION 8 long, 10 short	
	7		Center fastening plate, LION 9, 10 long, 12	
34	1	H49874	Side extension Lion 6 → 7 + 175 mm	
	1	H49261	Side extension Lion 6 → 8 short + 350 mm	
	1	H50285	Side extension Lion 8 long → 10 short + 350 mm	
	1	H49881	Side extension Lion 9 → 10 long + 175 mm	
	1	H49233	Side extension Lion 9 → 12 + 350 mm	
35	1	H49378	Cable plate long	

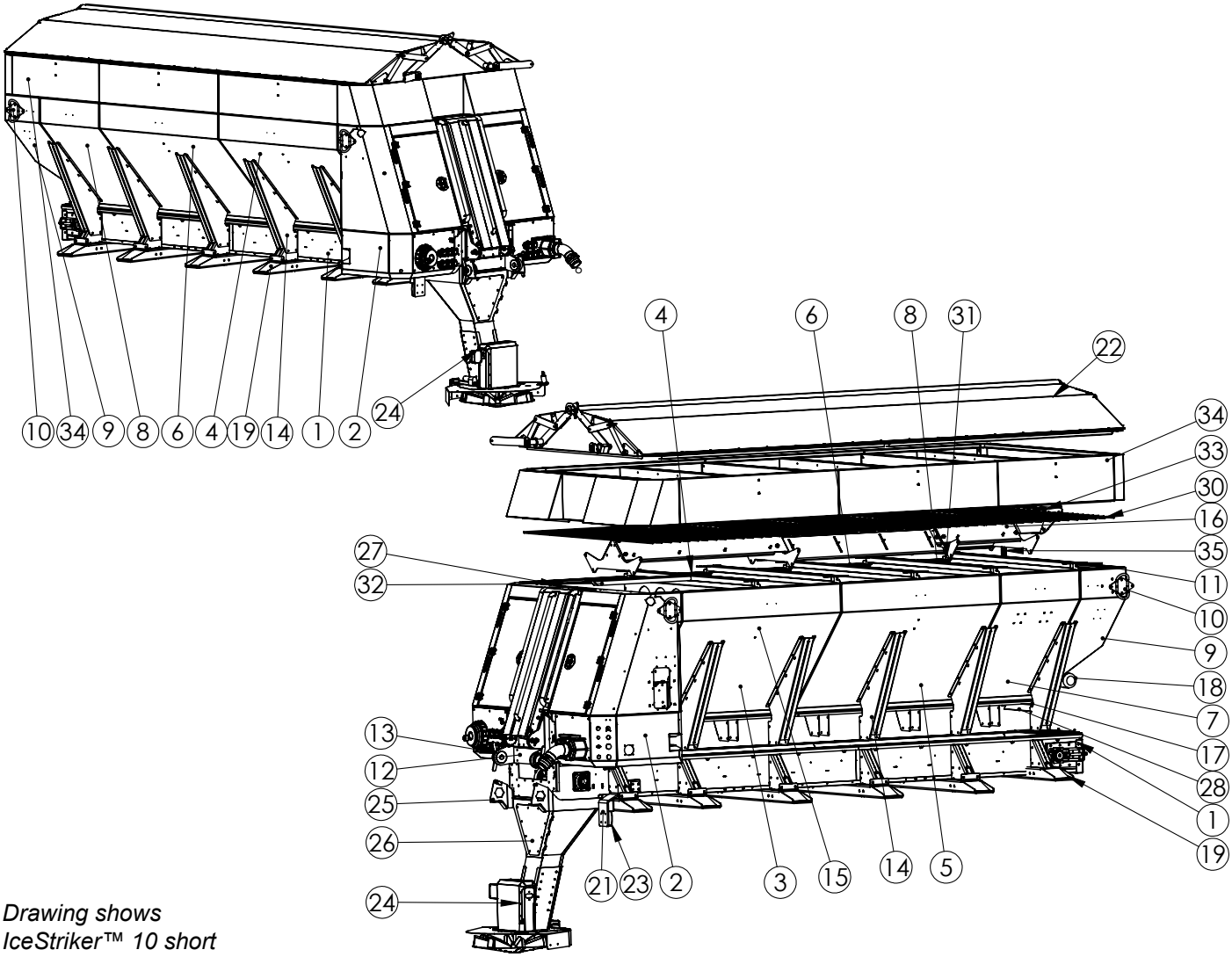

Drawing shows
IceStriker™ 10 short

LOWER CHUTE ASSEMBLY, ELECTRIC - H49150

Item	Qty	Part no.	Description	Notes
1	1	H45436	Lower chute frame	
2	1	H45432	Plate	
3	1	H45444	Spinner pre-assembled	
4	1	H50106	Gearbox plastic spacer	
5	1	H45440	Motor cover	
6	1	H45442	Plate	
7	3	H45443	Distance plate	
8	1	H45433	Bracket	
9	1	H42703	Adjuster arm	
10	1	H45441	Plate	
11	1	H24794	Motor Assembly	
12	1	H49161	Gearbox assembly	
13	1	H50036	Lion linear motor bracket	
14	1	H27706	EOM Sensor kit	Optional
15	1	H26681	LED Work Light, white	
16	1	H31000	Linear actuator 100mm 24V assembly, 2650mm harness	Optional
	1	H30999	Linear actuator 100mm 12V assembly, 2650mm harness	Optional

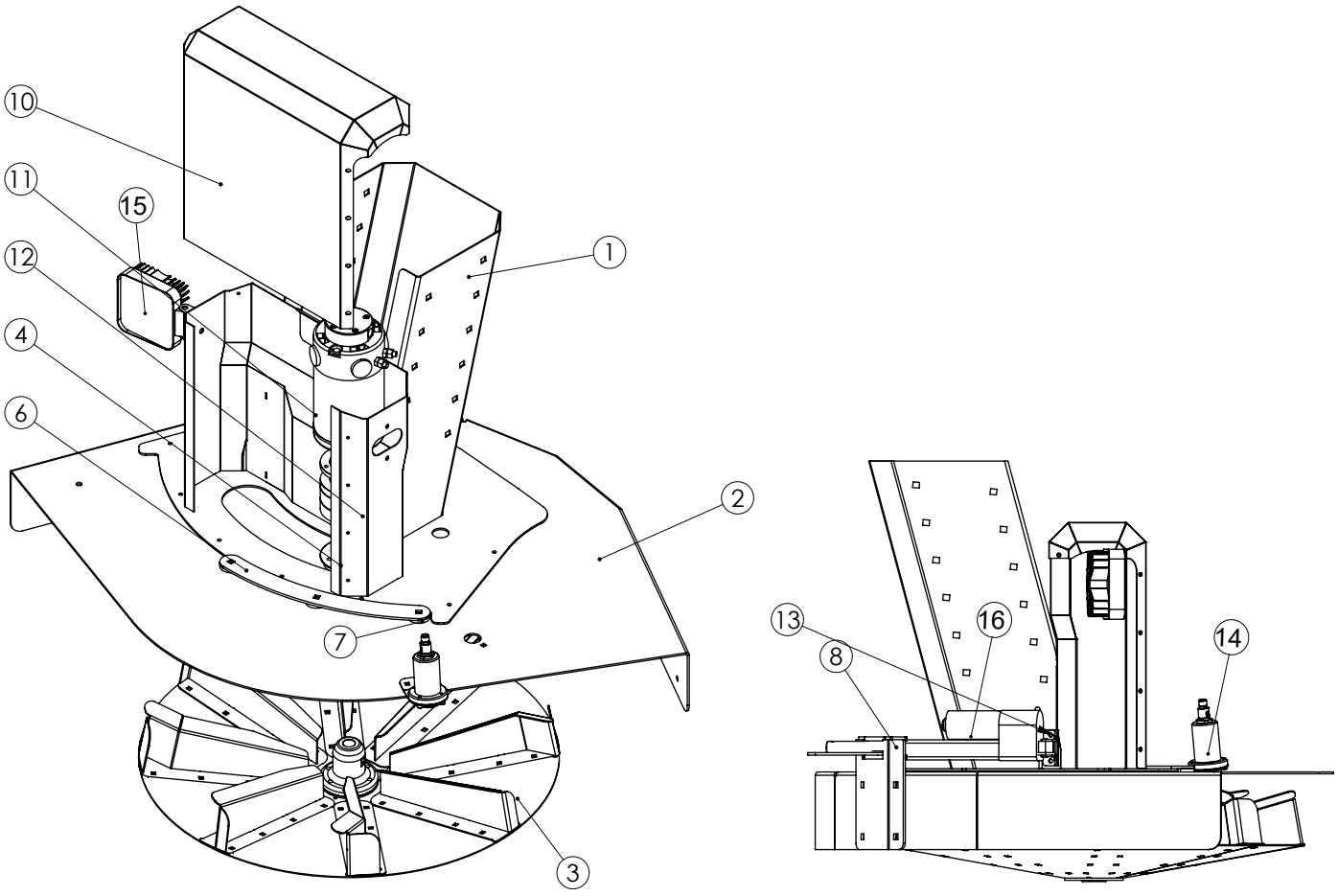

LOWER CHUTE ASSEMBLY, HYDRAULIC - H45430

Item	Qty	Part no.	Description	Notes
1	1	H45436	Lower chute frame	
2	1	H45431	Lower spinner cover welded	
3	1	H45444	Spinner pre-assembled	
4	2	H45440	Motor cover	
5	1	H45442	Plate	
6	1	H45433	Bracket	
7	1	H42703	Adjuster arm	
8	1	H26681	LED Work light, white	
9	1	H45794	Spinner support bearing pre-assembly	
10	3	H45443	Distance plate	
11	1	H47311	Rubber dust cover	
12	2	H47318	Dust cover holder	
13	2	H47319	Dust cover hose cap half	
14	1	H49828	Plate	
15	1	H50106	Gearbox plastic spacer	
16	1	H31000	Linear actuator 100mm 24V assembly, 2650mm harness	Optional
	1	H30999	Linear actuator 100mm 12V assembly, 2650mm harness	Optional
17	1	H42232	Bracket	

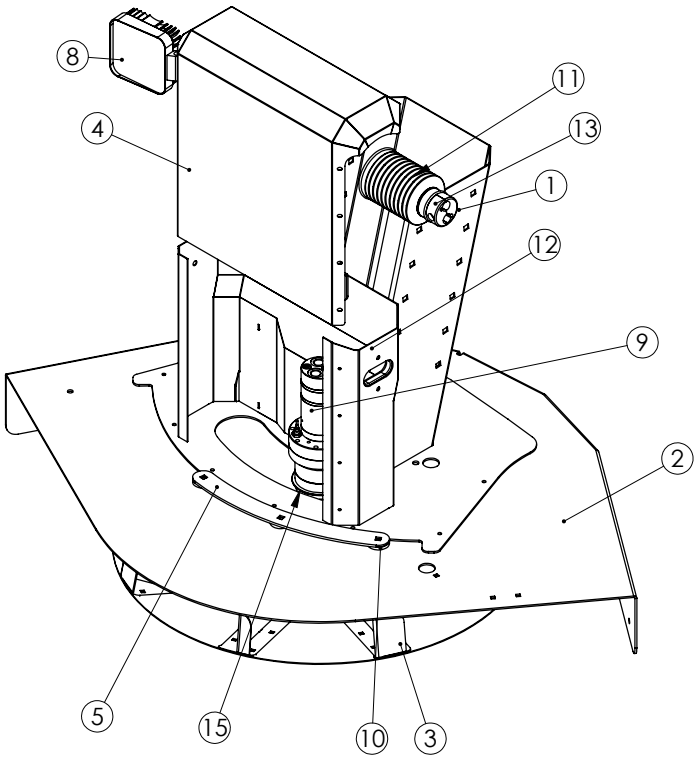

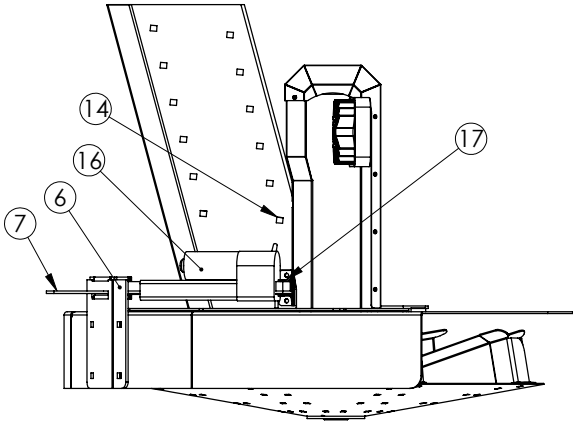

SPINNER PLATE PRE-ASSEMBLY - H45444

Item	Qty	Part no.	Description
1	1	H45708	Spinner disc welded
2	1	H45445	Spinner center
3	4	H45447	Spinner wing
4	4	H45709	Spinner wing welded

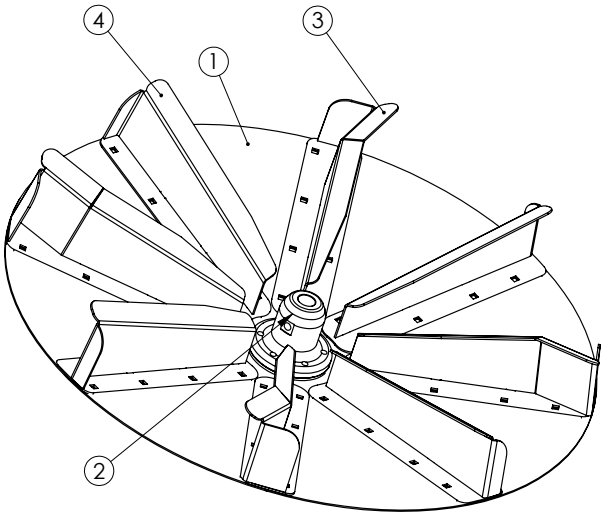

END OF MATERIAL SENSOR KIT, OPTIONAL - H27706

Item	*Qty*	*Part no.*	*Description*
1	1	H28019	Sensor bracket
2	1	H28020	Sensor cover
3	1	H28017	EOM sensor
ns	1	H30237	EOM sensor cable

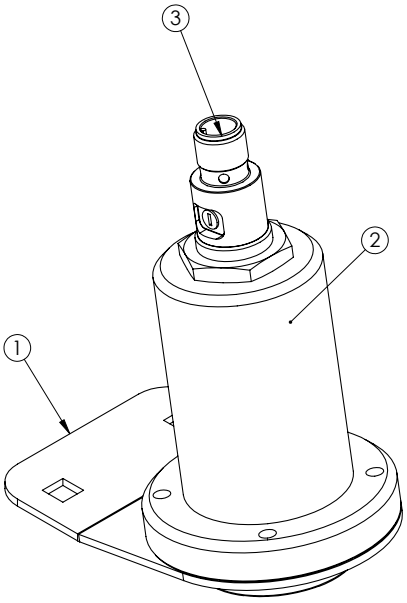

SPREADER REAR CABINET PRE-ASSEMBLY - H45770

Item	Qty	Part no.	Description
1	1	H45650	Rear cabinet bottom module welded
2	1	H45640	Rear cabinet top module welded
3	1	H45712	Cabinet door left
4	1	H45714	Cabinet door right
5	1	H45649	Plate
6	2	H42672	Door lock left
7	4	H27378	LED Strobe warning light yellow
8	12	H43883	Hinge
9	1	H45760	Cover plate
10	1	H45639	Cable bracket
11	2	H45638	Cable bracket
12	2	H45763	Tie-down bracket
13	2	H45766	Door lock plastic
14	2	H45767	Cover plate
15	2	H45768	Nut list
16	2	H46245	Door lower list
17	1	H46258	Cable holder
18	1	H50890	Pre-assembled ladder unit
19	2	H49999	Hand rail cover plate
20	1	H45637	Module bracket
21	1	H29007	Rubber grommet

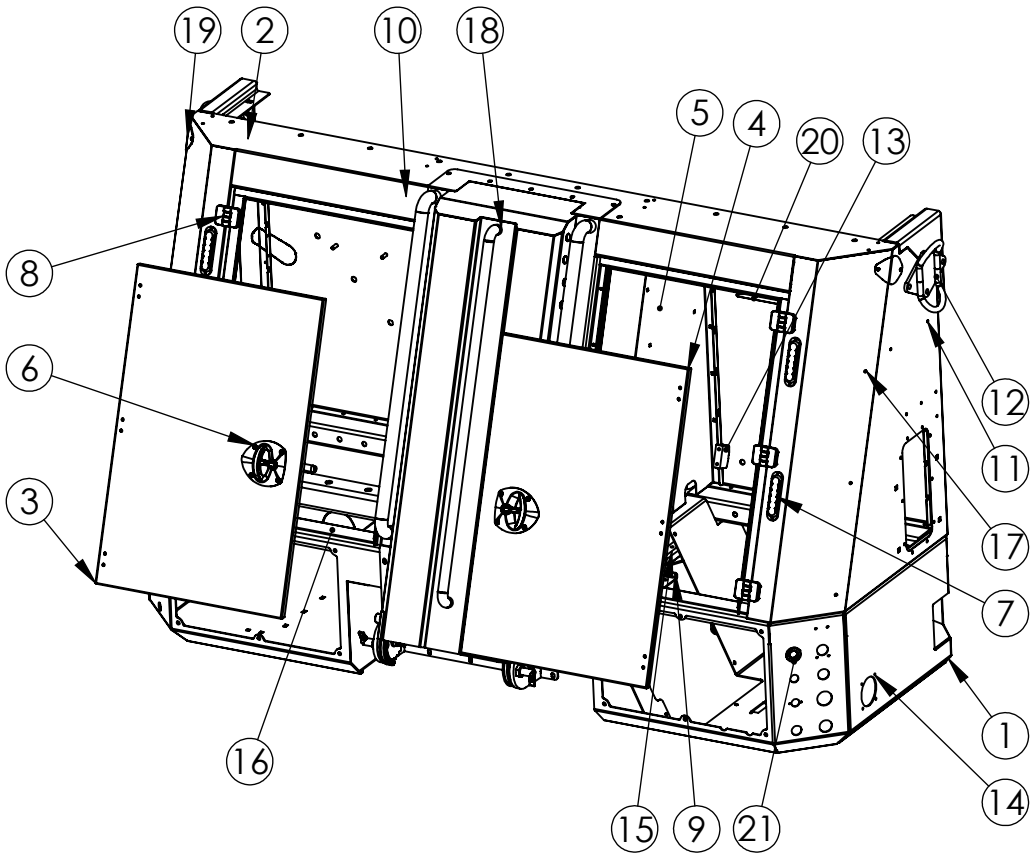

INVERT VEE KIT, LION 6-8 SHORT - H46230

Item	Qty	Part no.	Description
1	3	H46232	Bracket
2	1	H46233	Vee plate
3	4	H46235	Gate plate

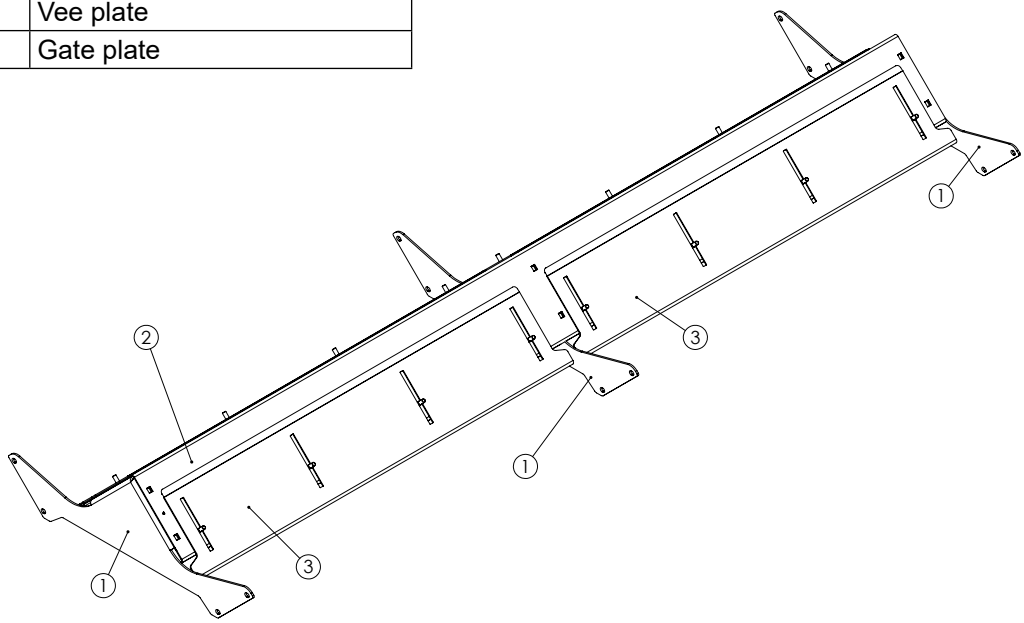

INVERT VEE KIT, LION 8-10 LONG - H50267

Item	Qty	Part no.	Description
1	4	H46232	Bracket
2	1	H46233	Vee plate
3	20	HF19369	Lock bolt DIN 603 A4 M12x25
4	20	HF15371	Flanged nylock M12 8.8 Zn
5	1	H47312	Vibrator support
6	1	H50268	Invert vee half plate
7	1	H49226	Invert vee end plate
8	2	H46235	Gate plate
9	1	H50098	Gate plate half module

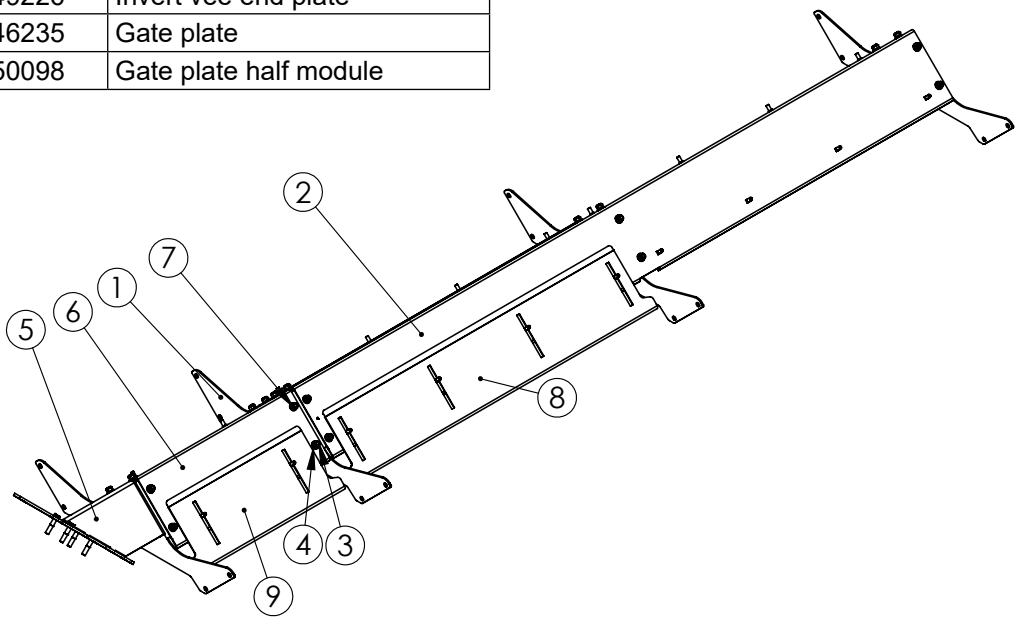

INVERT VEE KIT, LION 9, 10 LONG & 12 - H49224

Item	Qty	Part no.	Description
1	1	H49222	Invert vee short plate welded
2	4	H46232	Bracket
3	1	H46233	Vee plate “For M3 L1”
4	1	H49226	Invert vee end plate
5	20	HF19369	Lock bolt DIN 603 A4 M12x25
6	20	HF15371	Flanged nylock M12 8.8 Zn
7	1	H47312	Vibrator support

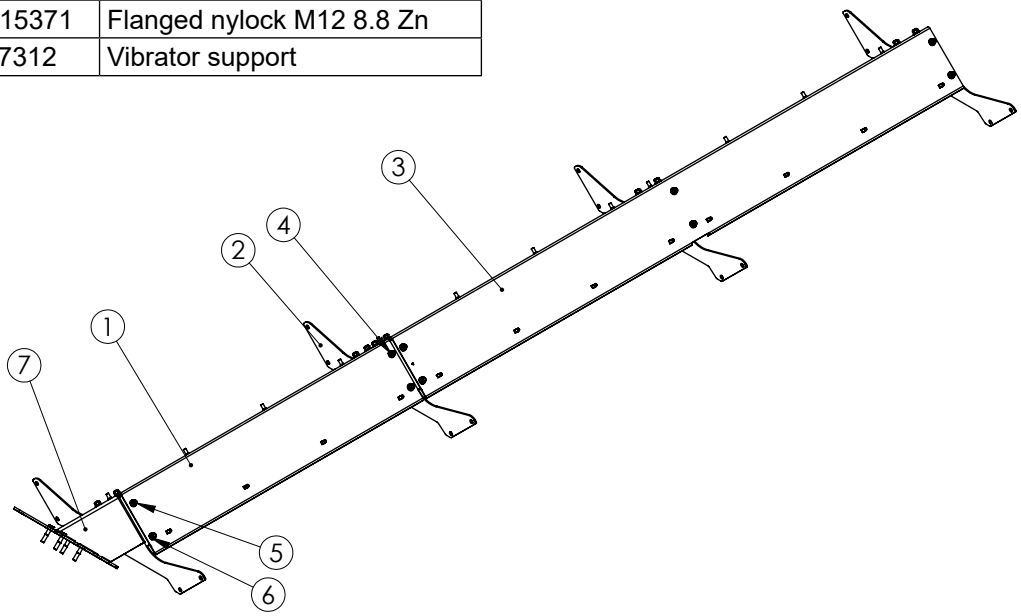

COVER PLATE FOR HYDRAULIC GEARBOX - H50638

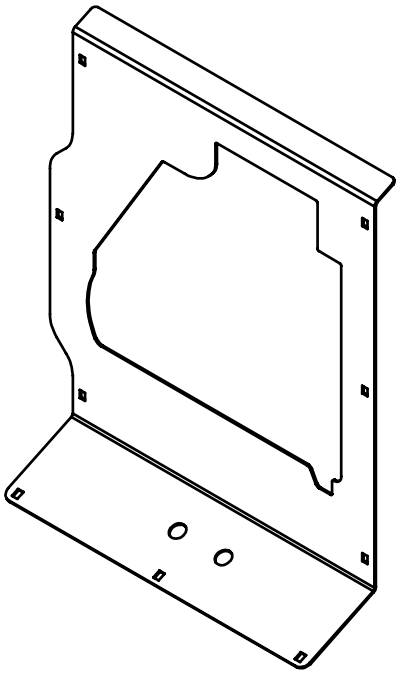

PRE-ASSEMBLED BOTTOM, CHAIN, LION 6-8 SHORT, HYDRAULIC - H45550

Item	Qty	Part no.	Description
1	1	H45551	Spreader bottom welded, Lion 6-8
2	4	H45588	Pintle sprocket machined 667X-8T
3	2	H45586	Bearing unit 50 mm
4	2	H45568	Chain cover rear
5	2	H45565	Plate
6	4	H45566	Distance plate
7	1	H45567	Plate
8	1	H45569	Chain cover front R
9	4	H45571	Nut list
10	1	H45570	Chain cover front L 3
11	1	H46241	Rear rubber bracket
12	1	H45575	Front chain cover
13	1	H45583	Front axle
14	2	H45587	Bearing unit, sliding
15	2	H45579	Nut
16	2	H45580	Bush nut
17	1	H45589	Pintle chain 667X 20.25”
18	2	H45581	Thread bar
19	2	H45582	Bush
20	4	H45590	Plastic chain glide
21	1	H45783	Chain brush pre-assembly
22	1	HH16087	Adjustable 90° CL fitting 6mm/M6
23	1	H45869	Rear rubber
24	1	H45591	Washer plate
25	3	H46047	Washer plate
26	1	H46238	Front cover plate
27	2	HF15078	Lock nut DIN985 8.8 Zn M20
28	1	H49398	Hydraulic Motor + gearbox assembly

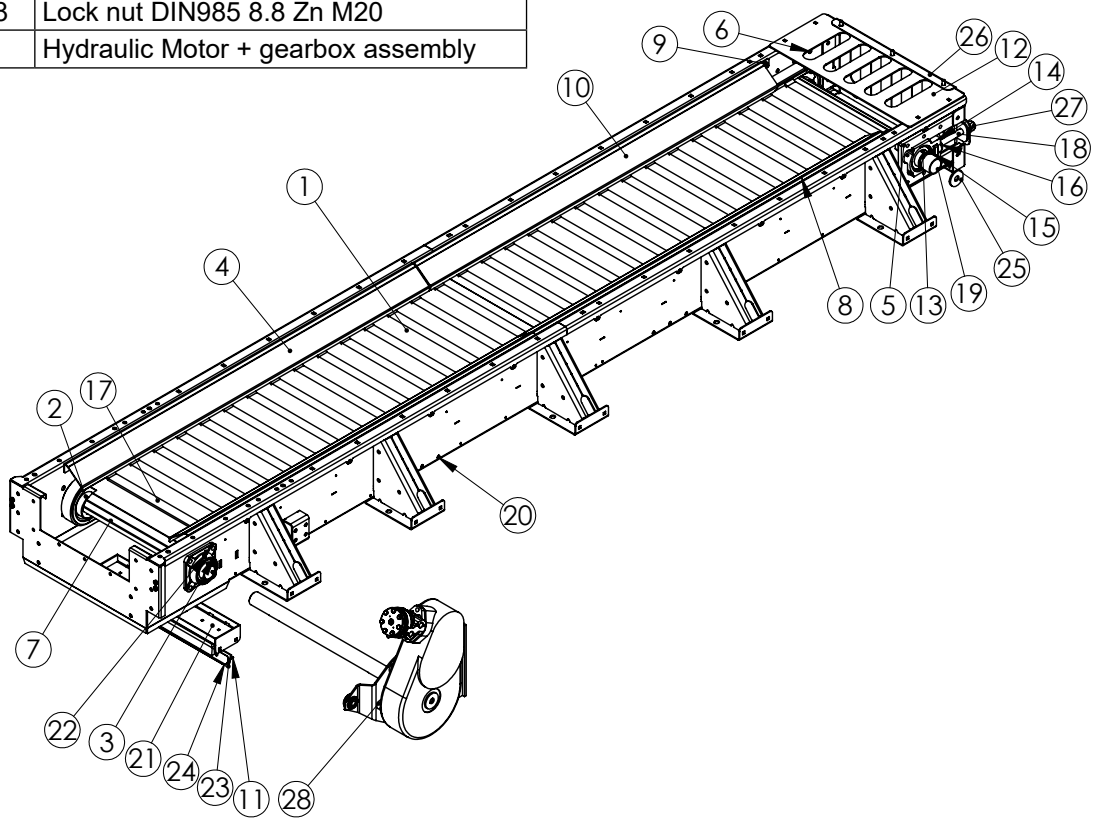

PRE-ASSEMBLED BOTTOM, DUAL AUGER, LION 6-8 SHORT, HYDRAULIC - H49616

Item	Qty	Part no.	Description
1	1	H49070	Auger bottom
2	4	H45586	Bearing unit 50mm
3	1	H49610	Bearing bracket right
4	1	H49611	Bearing bracket left
5	1	H49088	Auger right
6	1	H49089	Auger left
7	2	H49612	Bearing bracket
8	2	H49620	Coupling half
9	2	H49622	Axle coupling flex element
10	2	H49621	Coupling half
11	2	H49609	Gearbox
12	2	H49551	Hydraulic motor TA
13	2	H49545	Gearbox bracket

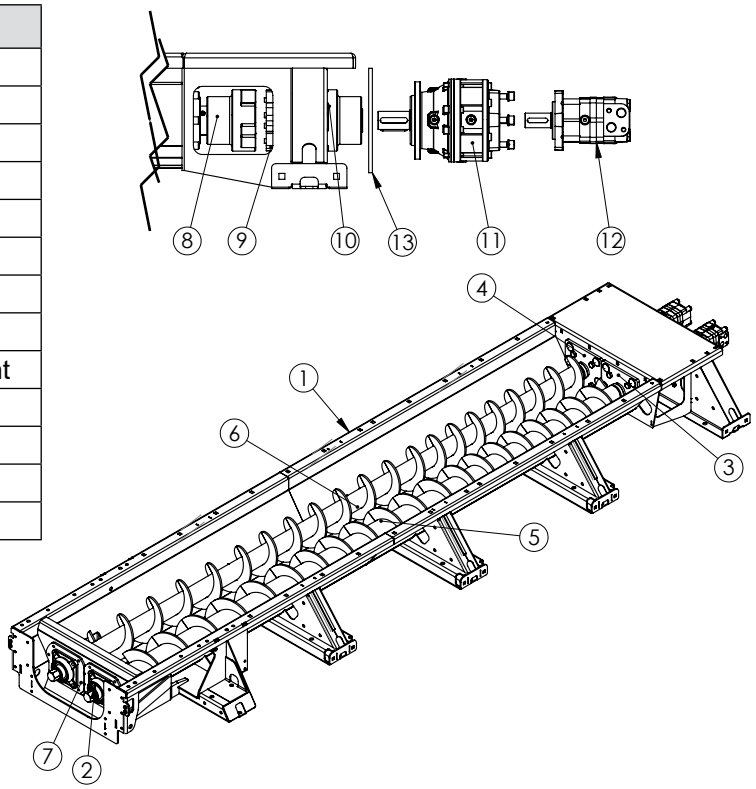

PRE-ASSEMBLED BOTTOM, DUAL AUGER, LION 6-8 SHORT, ELECTRIC - H50240

Item	Qty	Part no.	Description
1	1	H49070	Auger bottom
2	4	H45586	Bearing unit 50mm
3	1	H49610	Bearing bracket right
4	1	H49611	Bearing bracket left
5	1	H49088	Auger right
6	1	H49089	Auger left
7	2	H49612	Bearing bracket
8	2	H49620	Coupling half
9	2	H49622	Axle coupling flex element
10	2	H49621	Coupling half
11	2	H49545	Gearbox bracket
12	2	H49347	24V motor
13	2	H51082	Planetary Gearbox
14	1	H50481	Motor & inverter cover
15	2	H49349	24V inverter

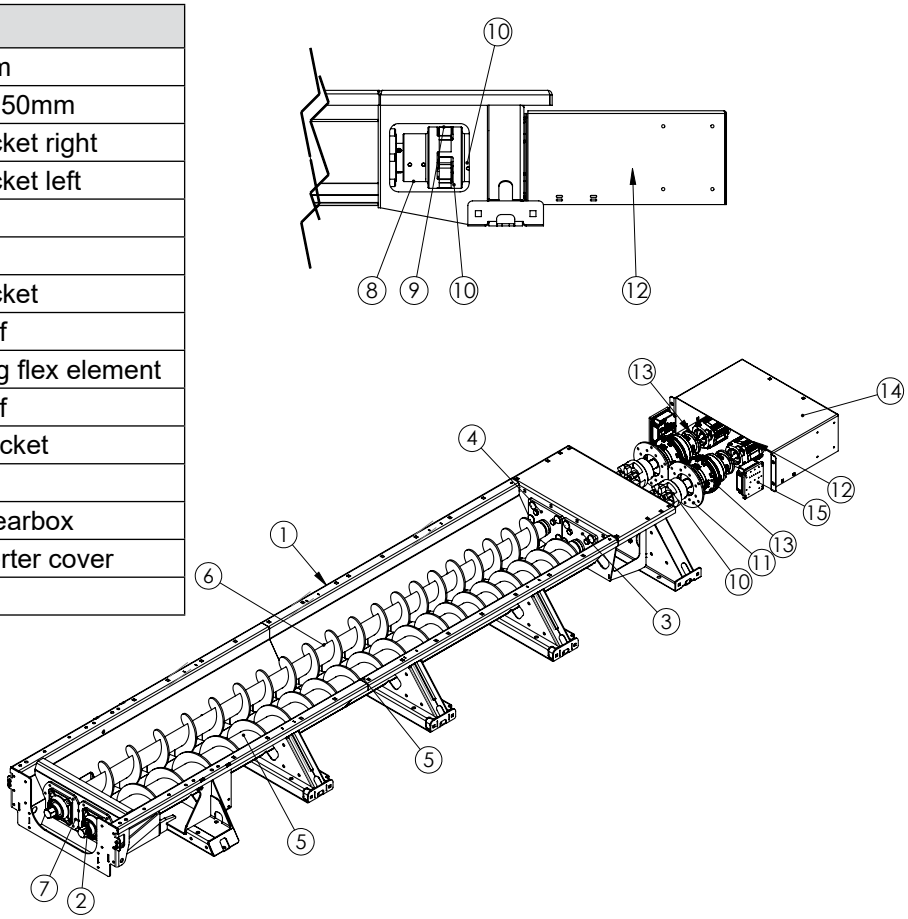

PRE-ASSEMBLED BOTTOM, CHAIN, LION 8 LONG, 10 SHORT, HYDRAULIC/ELECTRIC - H50237

Item	Qty	Part no.	Description
1	1	H50269	Welded bottom, LION 8 long, 10 short
2	2	H45565	Plate
3	4	H45566	Distance plate
4	1	H45567	Plate
5	1	H45869	Rear rubber
6	1	H45575	Front chain cover
7	2	H45579	Nut
8	2	H45580	Bush nut
9	2	H45581	Thread bar
10	2	H45582	Bush
11	1	H45583	Front axle
12	2	H45586	Bearing unit 50 mm
13	2	H45587	Bearing unit, sliding
14	4	H45588	Pintle sprocket machined 667X-8T
15	4	H45590	Plastic chain glide
16	1	H45591	Washer plate
17	1	H50275	Chain cover front left
18	1	H50276	Chain cover front right
19	1	H49212	Chain cover rear left
20	1	H49213	Chain cover rear right
21	2	H49214	Nut list long
22	2	H50277	Nut list 2,5
23	1	H46241	Rear rubber bracket
24	1	H45783	Chain brush pre-assembly
25	1	HH16087	Adjustable 90deg CL fitting 6mm/M6
26	3	H46047	Washer plate
27	1	H46238	Front cover plate
28	2	HF15078	Lock nut DIN985 8.8 Zn M20
29	1	H50274	Pintle chain 667X 20.25" wide L2,5

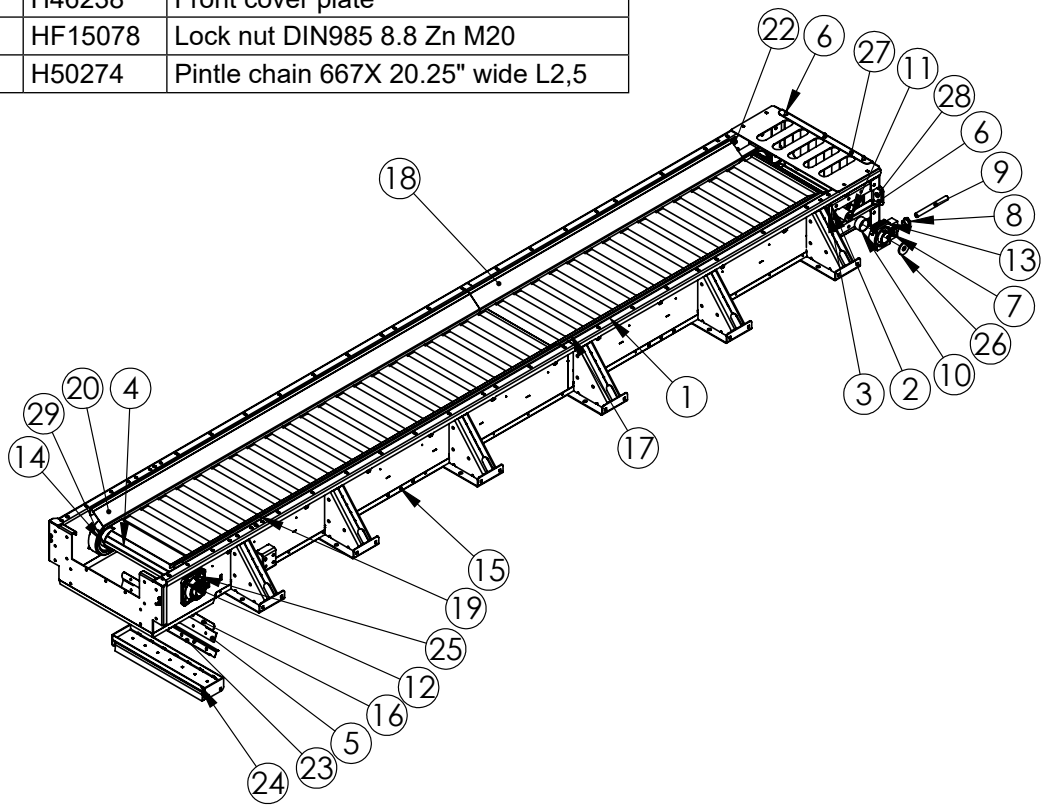

PRE-ASSEMBLED BOTTOM, CHAIN, LION 9, 10 LONG,12, HYDRAULIC/ELECTRIC - H49200

Item	Qty	Part no.	Description
1	1	H49201	Welded bottom, Lion 9-12
2	2	H45565	Plate
3	4	H45566	Distance plate
4	1	H45567	Plate
5	1	H45869	Rear rubber
6	1	H45575	Front chain cover
7	2	H45579	Nut
8	2	H45580	Bush nut
9	2	H45581	Thread bar
10	2	H45582	Bush
11	1	H45583	Front axle
12	2	H45586	Bearing unit 50mm
13	2	H45587	Bearing unit, sliding
14	4	H45588	Pintle sprocket machined 667X-8T
15	4	H45590	Plastic chain glide
16	1	H45591	Washer plate
17	1	H49210	Chain cover front left
18	1	H49211	Chain cover front right
19	1	H49212	Chain cover rear left
20	1	H49213	Chain cover rear right
21	4	H49214	Nut list long
22	1	H46241	Rear rubber bracket
23	1	H45783	Chain brush pre-assembly
24	1	HH16087	Adjustable 90deg CL fitting 6mm/M6
25	3	H46047	Washer plate
26	1	H46238	Front cover plate
27	2	HF15078	Lock nut DIN985 8.8 Zn M20
28	1	H49215	Pintle chain 667X 20.25" wide L2

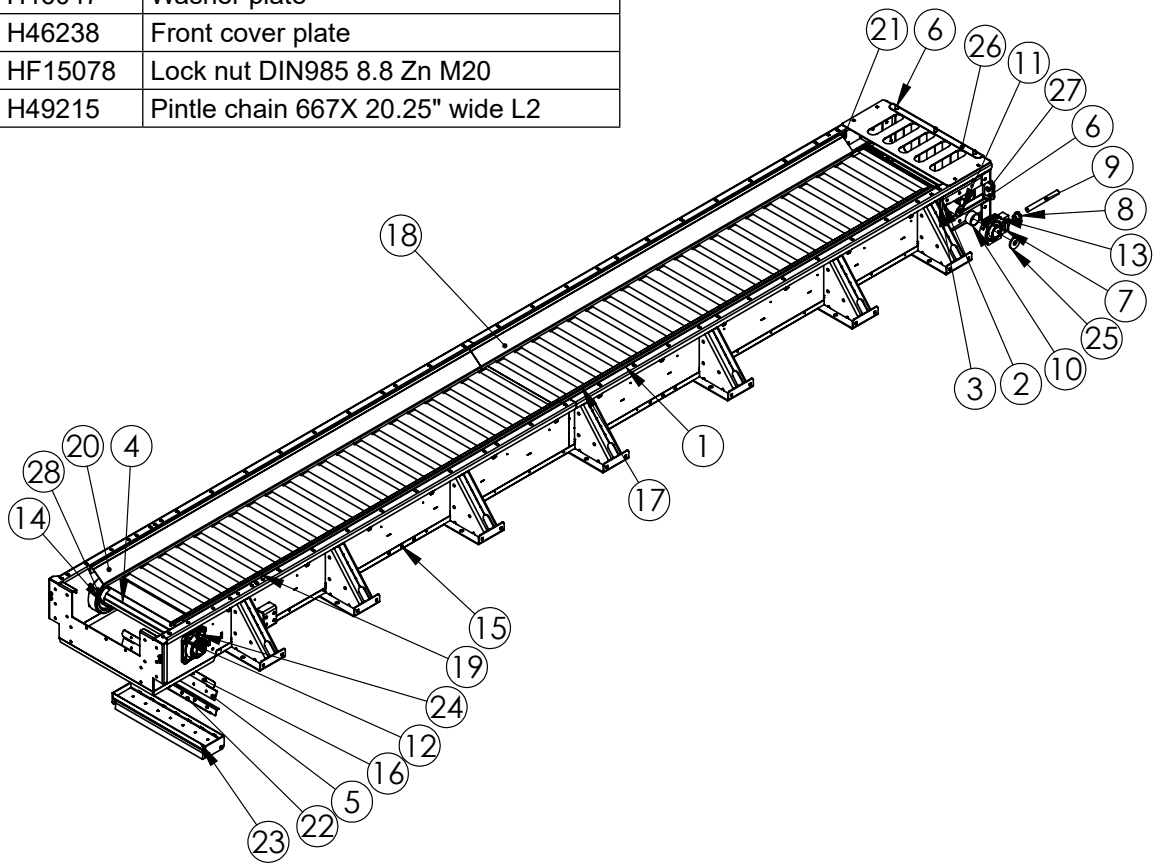

PRE-ASSEMBLED BOTTOM, DUAL AUGER, LION 9, 10 LONG,12, HYDRAULIC - H50239

Item	Qty	Part no.	Description
1	1	H49106	Auger bottom 9-12
2	4	H45586	Bearing unit 50 mm
3	1	H49610	Bearing bracket right
4	1	H49611	Bearing bracket left
5	1	H49101	Auger right
6	1	H49102	Auger left
7	2	H49612	Bearing bracket
8	2	H49620	Coupling half
9	2	H49622	Axle coupling flex element
10	2	H49621	Coupling half
11	2	H49545	Gearbox bracket
12	1	H53330	Twin auger support bracket kit
13	2	H49609	Gearbox
14	2	H49551	Hydraulic motor TA

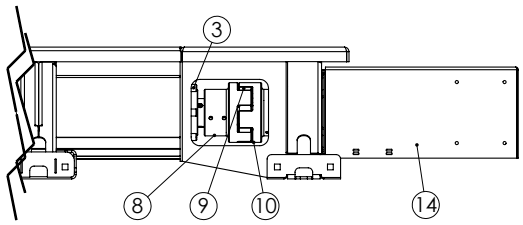

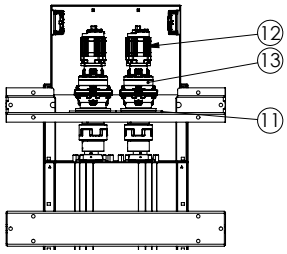

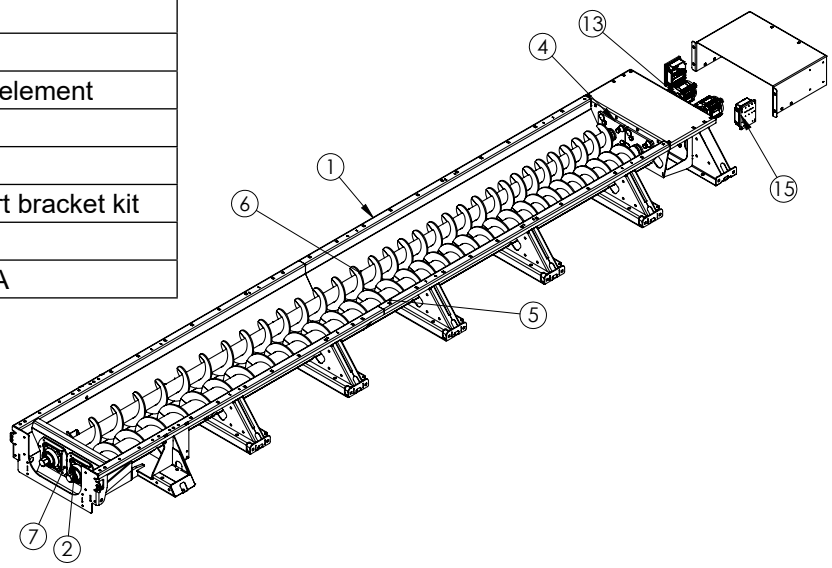

PRE-ASSEMBLED BOTTOM, DUAL AUGER, LION 9, 10 LONG,12, ELECTRIC - H50242

Item	Qty	Part no.	Description
1	1	H49106	Auger bottom 9-12
2	4	H45586	Bearing unit 50mm
3	1	H49610	Bearing bracket right
4	1	H49611	Bearing bracket left
5	1	H49101	Auger right
6	1	H49102	Auger left
7	2	H49612	Bearing bracket
8	2	H49620	Coupling half
9	2	H49622	Axle coupling flex element
10	2	H49621	Coupling half
11	2	H49545	Gearbox bracket
12	2	H49347	24V motor IEC80 B14 flange
13	2	H51082	Planetary Gearbox
14	1	H50481	Motor & inverter cover
15	2	H49349	24V inverter

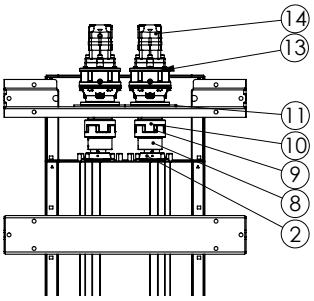

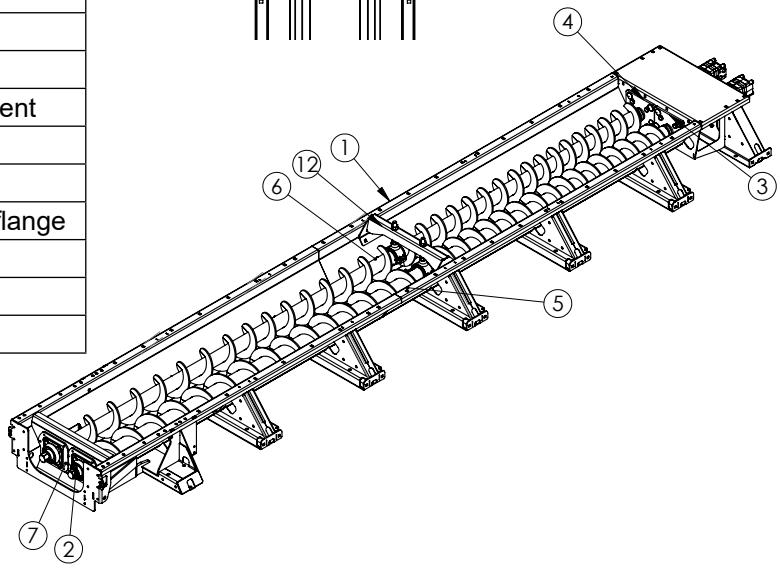

PROTECTIVE TARPAULIN SYSTEM, LION 6 - H46322

Item	Qty	Part no.	Description
1	2	H45890	Top end plate
2	2	H46683	Tarp pipe top
3	2	H46685	Tarp pipe middle
4	2	H46686	Tarp arm
5	4	H46688	Plate
6	4	H46689	Plate
7	2	H46690	Tarp opening arm
8	2	H46691	Tarp holder
9	2	H46693	Tarp holder
10	4	H46695	Tarp strip
11	2	H46696	Tarp
12	2	H46800	Plastic spacer
13	4	H46801	Plastic spacer
14	8	H46799	Plastic spacer
15	1	H47140	Tarp lock hook
16	2	H47141	Lock plate
17	2	H47142	Lock holder
18	2	H49253	Linear motor plate
19	2	H46905	Plastic spacer 25/40-13
20	2	HF12520	Bolt M24x120 DIN 931 8.8 ZN
21	2	HF15082	Lock nut M24 DIN 985 M24 8.8Zn

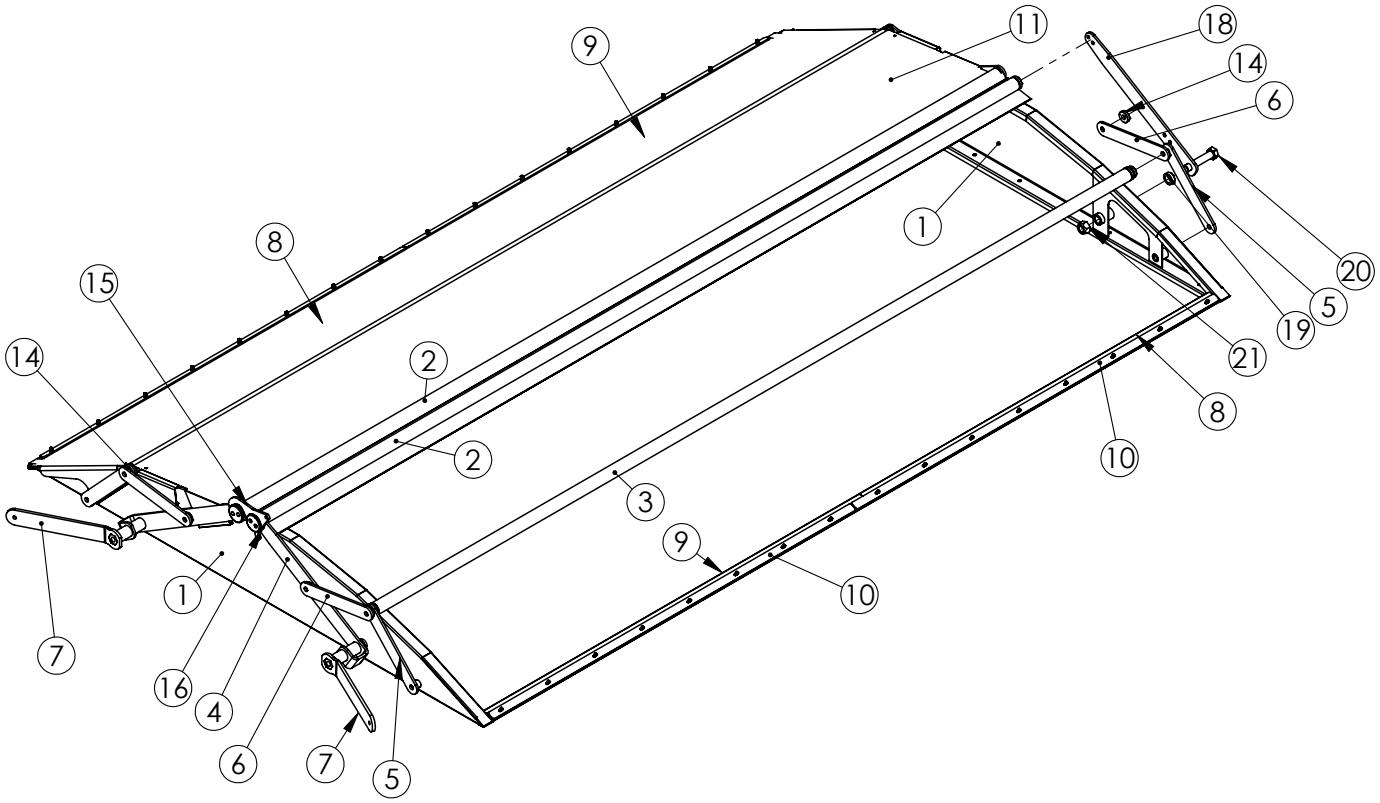

PROTECTIVE TARPAULIN SYSTEM, LION 7 - H50100

Item	Qty	Part no.	Description
1	1	H45890	Top end plate
2	2	H46686	Tarp arm
3	4	H46688	Plate
4	4	H46689	Plate
5	2	H46683	Tarp pipe top
6	2	H46685	Tarp pipe middle
7	2	H46696	Tarp
8	4	H46801	Plastic spacer
9	8	H46799	Plastic spacer
10	2	H47142	Lock holder
11	2	H47141	Lock plate
12	2	H49253	Linear motor plate
13	2	H46905	Plastic spacer 25/40-13
14	2	HF12520	Bolt M24x120 DIN 931 8.8 Zn
15	2	HF15082	Lock nut M24 DIN 985
16	2	H46800	Plastic spacer
17	1	H47140	Tarp lock hook
18	2	H46690	Tarp opening arm
19	1	H50039	Welded end extension
20	4	H50086	Side fastening bracket for extension
21	4	H50088	Tarp strip
22	1	H50047	Base plate left
23	1	H50048	Base plate right

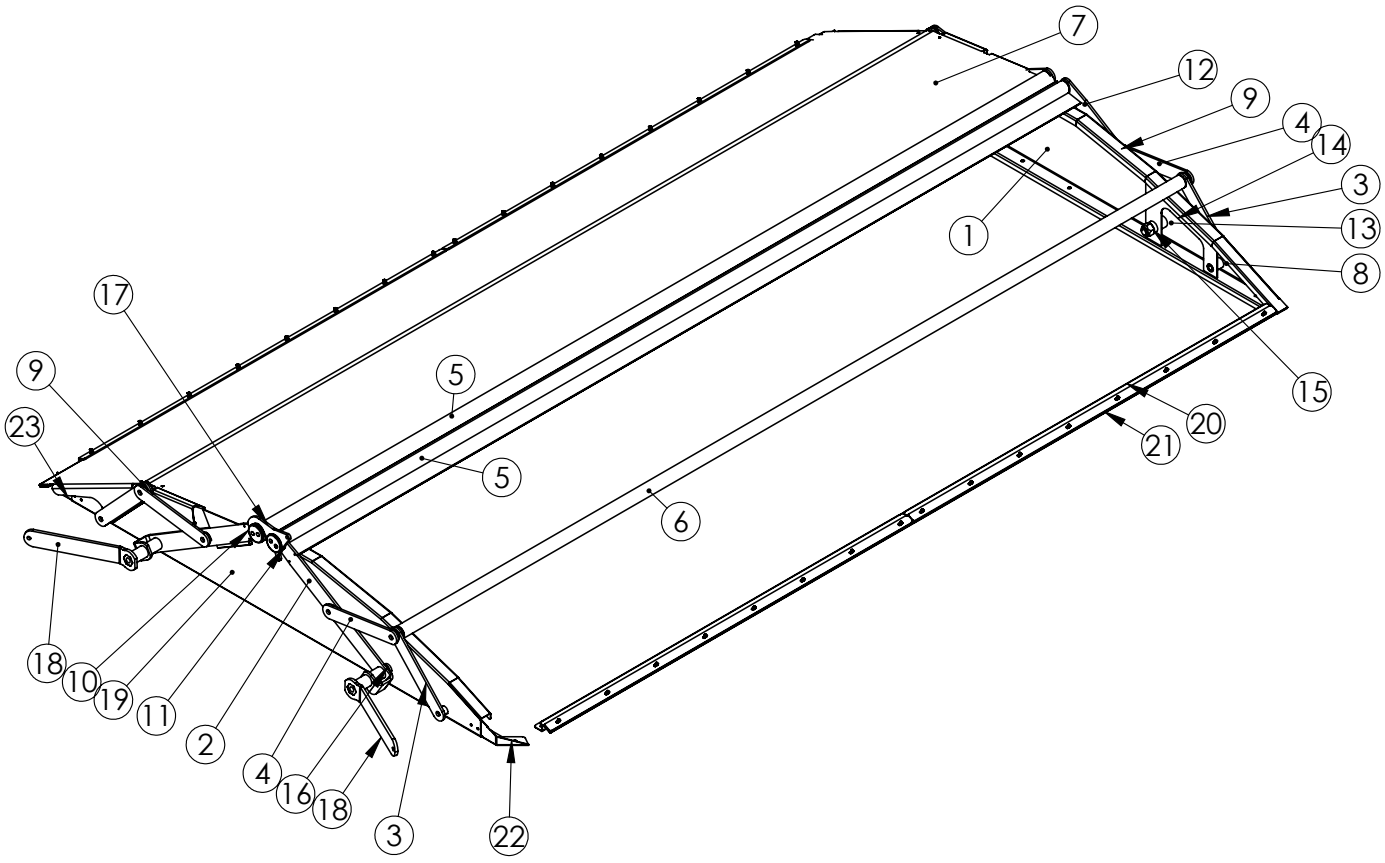

PROTECTIVE TARPAULIN SYSTEM, LION 8 SHORT - H49375

Item	Qty	Part no.	Description
1	1	H45890	Top end plate
2	2	H46686	Tarp arm
3	4	H46688	Plate
4	4	H46689	Plate
5	2	H46683	Tarp pipe top
6	2	H46685	Tarp pipe middle
7	2	H46696	Tarp
8	4	H46801	Plastic spacer
9	8	H46799	Plastic spacer
10	2	H47142	Lock holder
11	2	H47141	Lock plate
12	2	H49253	Linear motor plate
13	2	H46905	Plastic spacer 25/40-13
14	2	HF12520	Bolt M24x120 DIN 931 8.8 ZN
15	2	HF15082	Lock nut M24 DIN 985
16	2	H46800	Plastic spacer
17	1	H47140	Tarp lock hook
18	2	H46690	Tarp opening arm
19	1	H50039	Welded end extension
20	4	H50086	Side fastening bracket for extension
21	4	H50088	Tarp strip
22	1	H50045	Lion 12 corner bracket left
23	1	H50046	Lion 12 corner bracket right

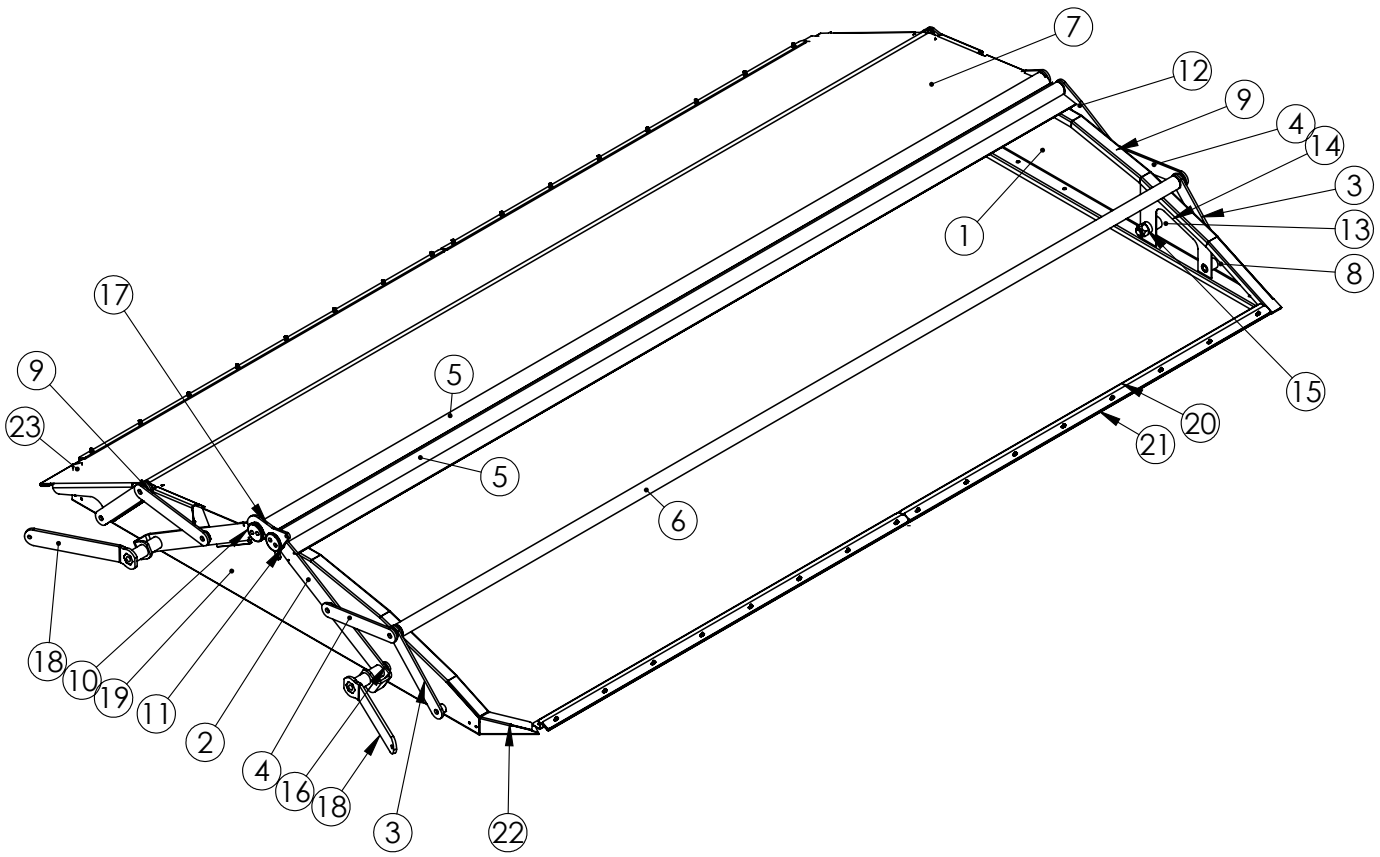

PROTECTIVE TARPAULIN SYSTEM, LION 8 LONG - H50101

Item	Qty	Part no.	Description
1	2	H45890	Top end plate
2	4	H46688	Plate
3	4	H46689	Plate
4	2	H50278	Tarpaulin pipe middle
5	2	H50280	Outer tarpaulin pipe
6	4	H50282	Side fastening bracket
7	4	H50284	Tarp strip Lion 8 long
8	2	H50281	Lion 8 long tarp
9	4	H46801	Plastic spacer
10	2	H46800	Plastic spacer
11	8	H46799	Plastic spacer
12	2	H47142	Lock holder
13	2	H47141	Lock plate
14	2	H49253	Linear motor plate
15	4	HF15082	Lock nut M24 DIN 985 M24 8.8Zn
16	2	HF12520	Bolt M24x120 DIN 931 8.8 ZN
17	2	H46905	Plastic spacer 25/40-13
18	2	H46686	Tarp arm
19	2	H46690	Tarp opening arm
20	1	H47140	Tarp lock hook
21	1	H50089	Lion tarp support

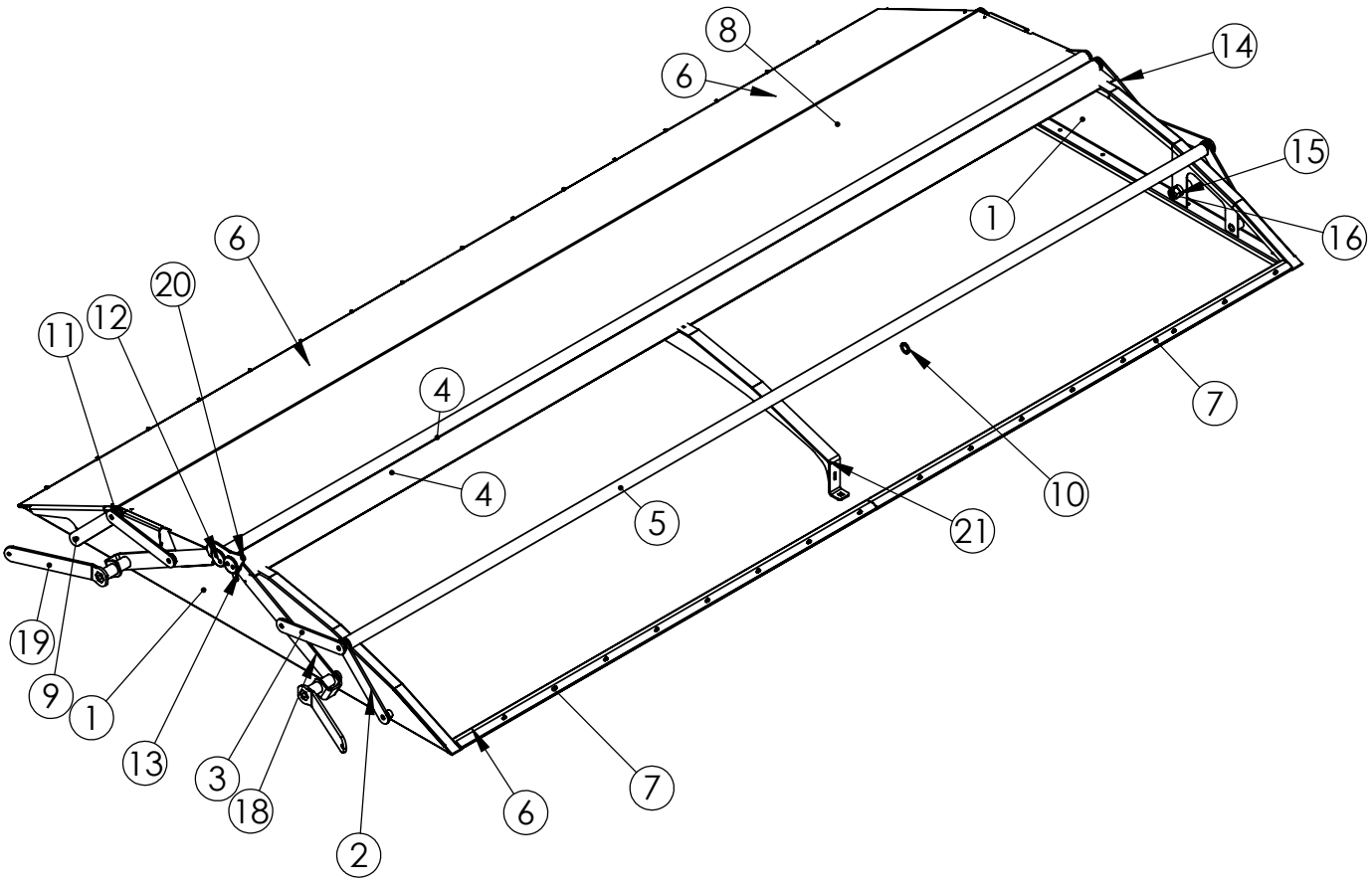

PROTECTIVE TARPAULIN SYSTEM, LION 9 - H46323

Item	Qty	Part no.	Description
1	2	H45890	Top end plate
2	4	H46688	Plate
3	4	H46689	Plate
4	2	H49244	Tarpaulin pipe middle
5	2	H49246	Outer tarpaulin pipe
6	4	H49248	Side fastening bracket
7	4	H49250	Tarp strip Lion 9-12
8	2	H49251	Lion 9-12 tarp
9	4	H46801	Plastic spacer
10	2	H46800	Plastic spacer
11	8	H46799	Plastic spacer
12	2	H47142	Lock holder
13	2	H47141	Lock plate
14	2	H49253	Linear motor plate
15	4	HF15082	Lock nut M24 DIN 985 M24 8.8Zn
16	2	HF12520	Bolt M24x120 DIN 931 8.8 ZN
17	2	H46905	Plastic spacer 25/40-13
18	4	H46686	Tarp arm
19	2	H46690	Tarp opening arm
20	1	H47140	Tarp lock hook
21	1	H50089	Lion tarp support

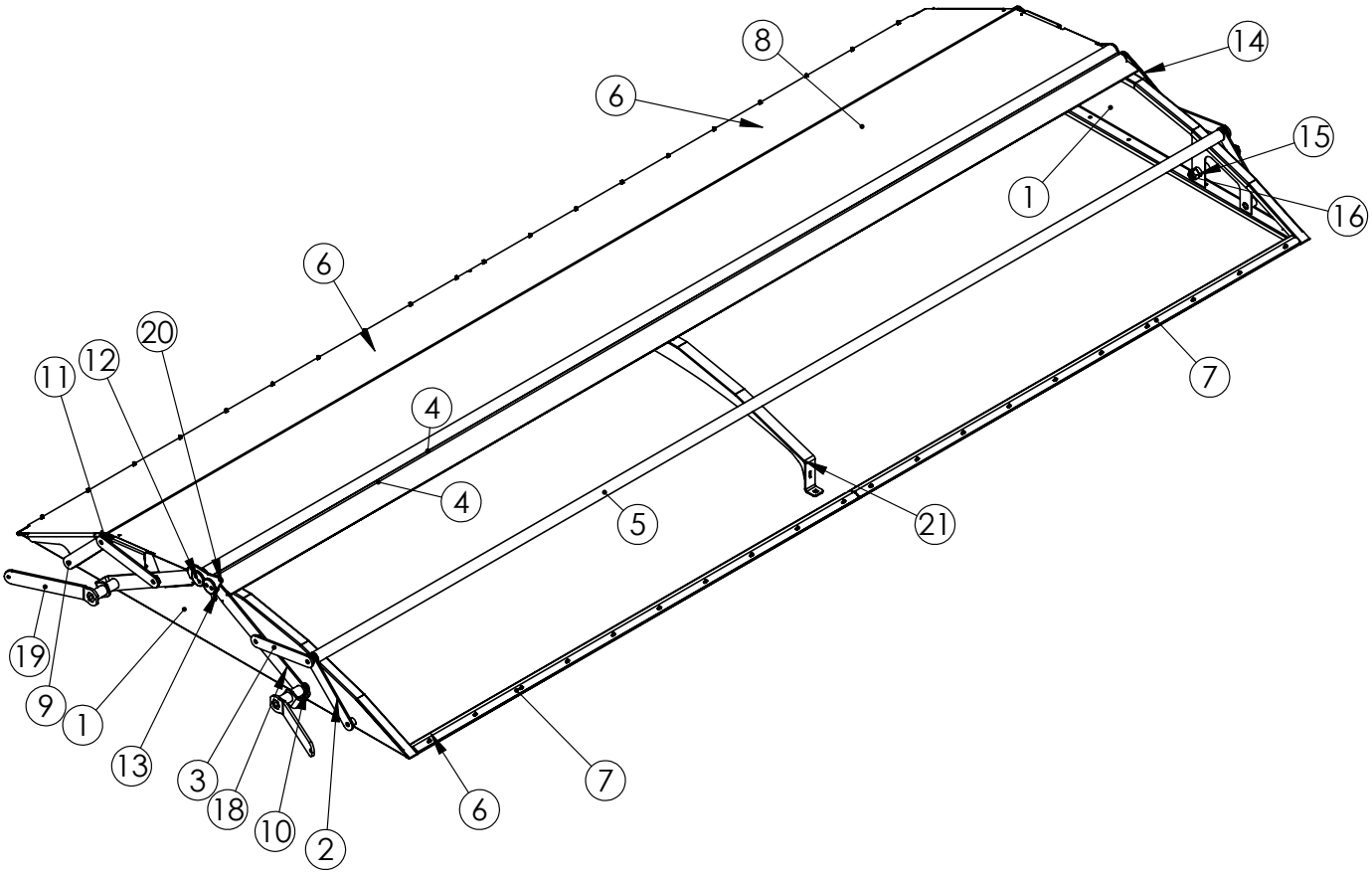

PROTECTIVE TARPAULIN SYSTEM, LION 10 SHORT - H50104

Item	Qty	Part no.	Description
1	1	H45890	Top end plate
2	4	H46688	Plate
3	4	H46689	Plate
4	2	H50278	Tarpaulin pipe middle
5	2	H50280	Outer tarpaulin pipe
6	4	H50287	Side fastening bracket Lion 10 short
7	4	H50235	Tarp strip Lion 10 short
8	2	H50281	Tarp
9	4	H46801	Plastic spacer
10	2	H46800	Plastic spacer
11	8	H46799	Plastic spacer
12	2	H47142	Lock holder
13	2	H47141	Lock plate
14	2	H49253	Linear motor plate
15	4	HF15082	Lock nut M24 DIN 985 M24 8.8Zn
16	2	HF12520	Bolt M24x120 DIN 931 8.8 ZN
17	2	H46905	Plastic spacer 25/40-13
18	2	H46686	Tarp arm
19	2	H46690	Tarp opening arm
20	1	H47140	Tarp lock hook
21	1	H50089	Lion tarp support
22	1	H50039	Welded end extension
23	1	H50045	Corner bracket left
24	1	H50046	Corner bracket right

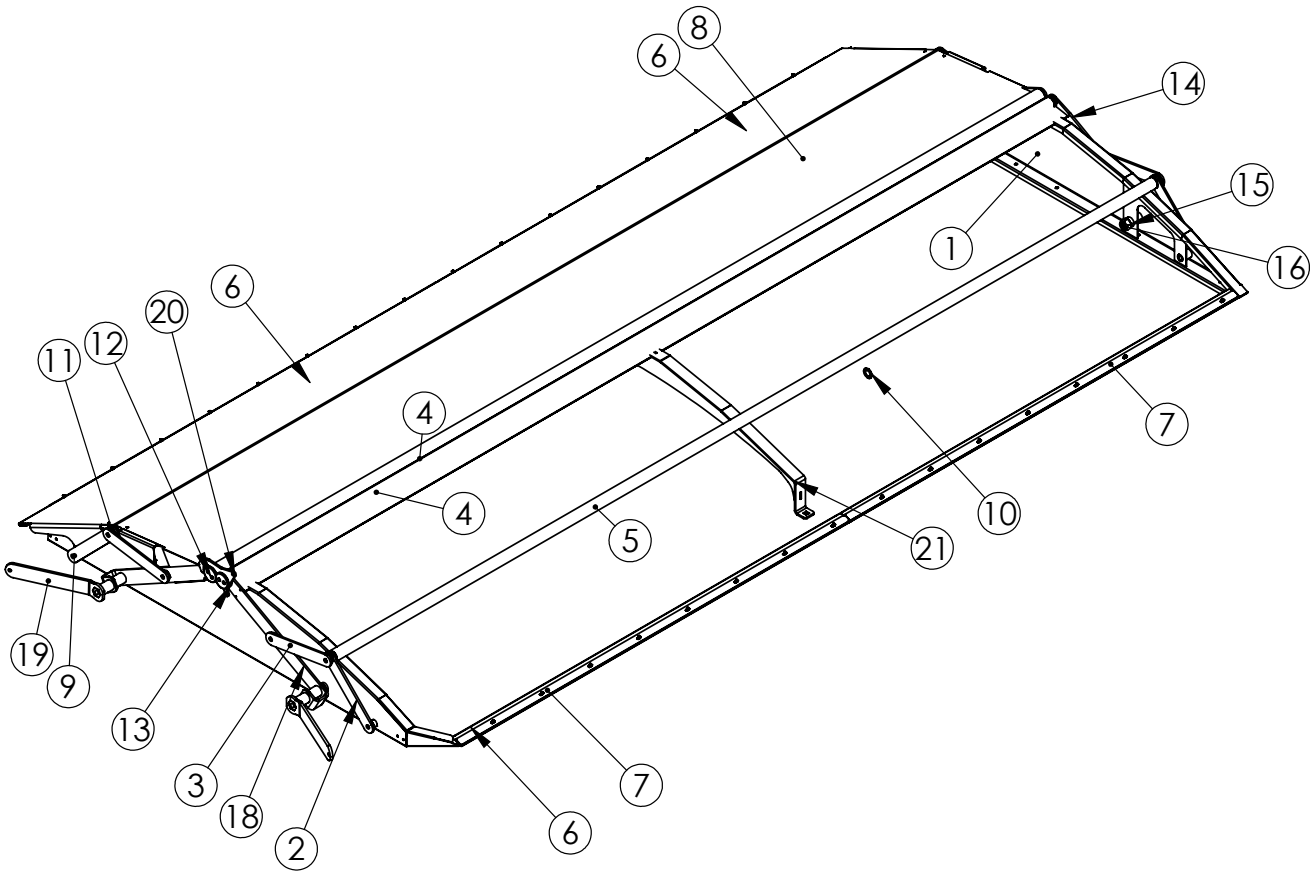

PROTECTIVE TARPAULIN SYSTEM, LION 10 LONG - H50102

Item	Qty	Part no.	Description
1	1	H45890	Top end plate
2	4	H46688	Plate
3	4	H46689	Plate
4	2	H49244	Tarpaulin pipe middle
5	2	H49246	Outer tarpaulin pipe
6	2	H49248	Side fastening bracket
7	2	H49250	Tarp strip
8	2	H49251	Tarp
9	4	H46801	Plastic spacer
10	8	H46799	Plastic spacer
11	2	H47142	Lock holder
12	2	H47141	Lock plate
13	2	H49253	Linear motor plate
14	4	HF15082	Lock nut M24
15	2	HF12520	Bolt M24x120 DIN 931 8.8 ZN
16	2	H46905	Plastic spacer 25/40-13
17	2	H46690	Tarp opening arm
18	2	H46800	Plastic spacer
19	1	H50089	Lion tarp support
20	1	H50039	Welded end extension
21	1	H50043	Lion 10 corner bracket left
22	1	H50044	Lion 10 corner bracket right
23	2	H50085	Side fastening bracket for extension
24	2	H50084	Tarp strip
25	2	H46686	Tarp arm
26	1	H47140	Tarp lock hook

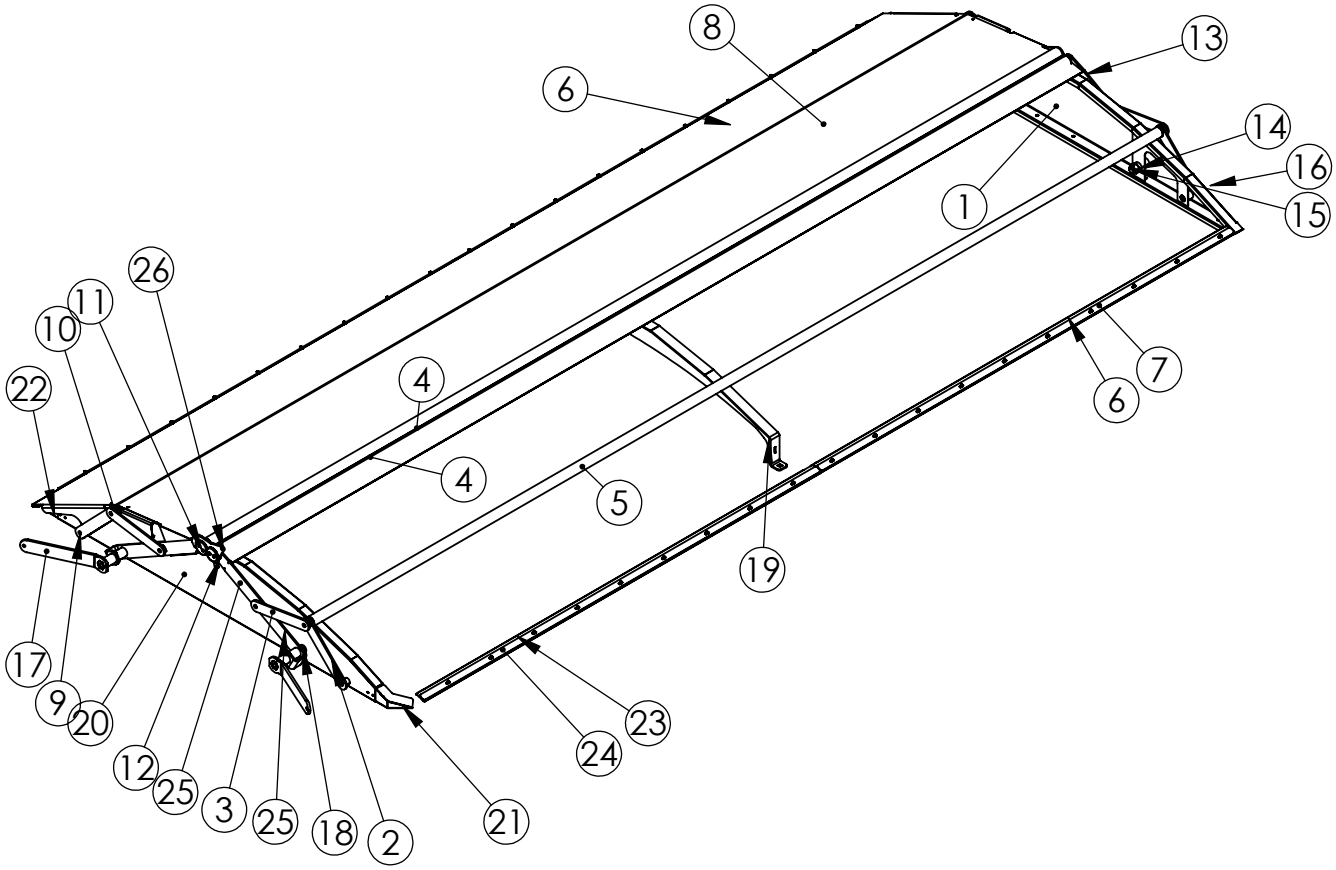

PROTECTIVE TARPAULIN SYSTEM, LION 12 - H50103

Item	Qty	Part no.	Description
1	1	H45890	Top end plate
2	4	H46688	Plate
3	4	H46689	Plate
4	2	H49244	Tarpaulin pipe middle
5	2	H49246	Outer tarpaulin pipe
6	2	H49248	Side fastening bracket
7	2	H49250	Tarp strip Lion 9-12
8	2	H49251	Lion 9-12 tarp
9	4	H46801	Plastic spacer
10	8	H46799	Plastic spacer
11	2	H47142	Lock holder
12	2	H47141	Lock plate
13	2	H49253	Linear motor plate
14	4	HF15082	Lock nut M24
15	2	HF12520	Bolt M24x120 DIN 931 8.8 ZN
16	2	H46905	Plastic spacer 25/40-13 Ø40-13
17	2	H46690	Tarp opening arm
18	2	H46800	Plastic spacer
19	1	H50089	Lion tarp support
20	1	H50039	Welded end extension
21	2	H50085	Side fastening bracket for extension
22	2	H50084	Tarp strip Lion 9-12
23	1	H50045	Lion 12 corner bracket left
24	1	H50046	Lion 12 corner bracket right
25	2	H46686	Tarp arm
26	1	H47140	Tarp lock hook

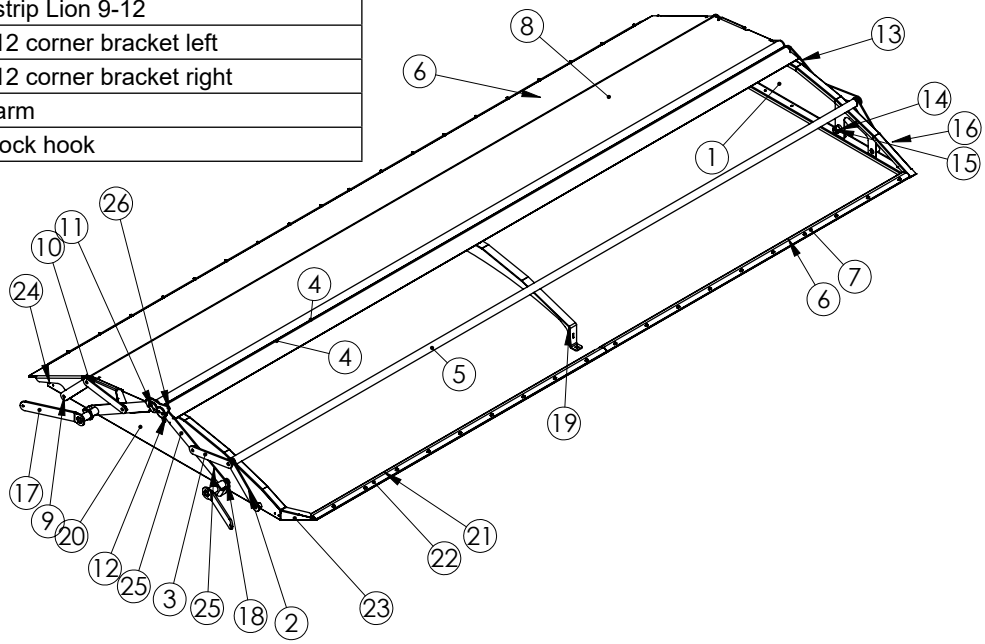

ELECTRIC TARP SYSTEM (OPTIONAL) - H49397

Item	Qty	Part no.	Description
1	2	H49252	Linear motor
2	4	H49389	Bolted distance
3	4	HF11696	Hexagon head bolt 931/10.9 M12x100
4	2	H49253	Linear motor plate
5	2	HF12520	Bolt M24x120 DIN 931 8.8 ZN
ns	2	H46905	Plastic spacer 25/40-13
9	4	H53551	Bended stopper

ns = not shown

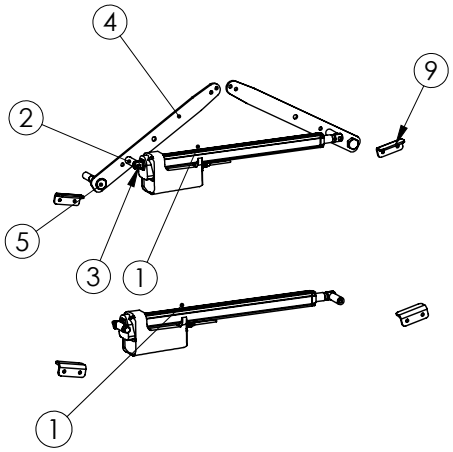

SIDE EXTENSION LION 6 → 7 + 175 mm - H49874

Item	Qty	Part no.	Description
1	2	H49238	Crossing bracket
2	3	H49726	Joint crossing bracket
3	2	H50073	Short side front extension plate
4	1	H50075	Front extension plate
5	4	H50072	Short side extension plate
6	1	H50077	Right corner bracket
7	1	H50074	Rear extension plate
8	1	H50076	Left corner bracket
9	1	H50096	Cover plate left
10	1	H50097	Cover plate right

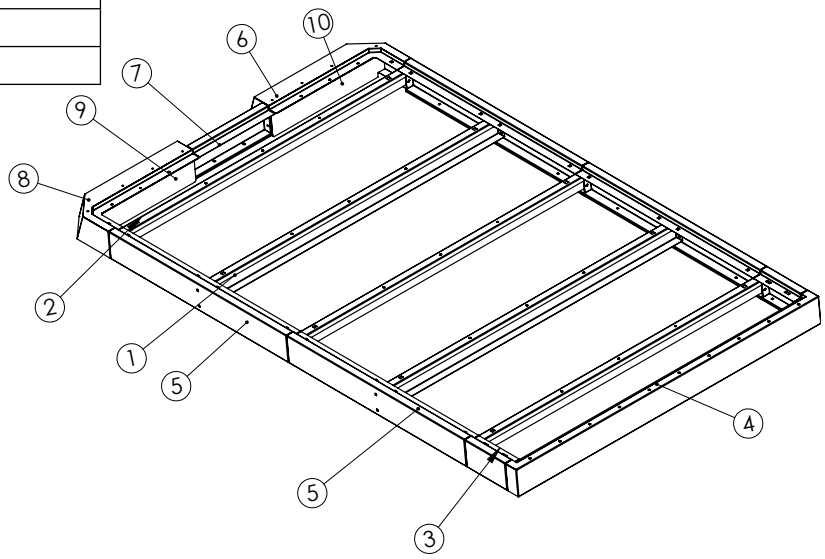

SIDE EXTENSION LION 6 → 8 SHORT + 350 mm - H49261

Item	Qty	Part no.	Description
1	3	H49726	Joint crossing bracket
2	2	H49238	Crossing bracket
3	4	H50060	Short side extension plate
4	2	H50061	Short side front extension plate
5	1	H50062	Rear extension plate
6	1	H50063	Front extension plate
7	1	H50064	Left corner bracket
8	1	H50065	Right corner bracket
9	1	H50094	Cover plate left
10	1	H50095	Cover plate right

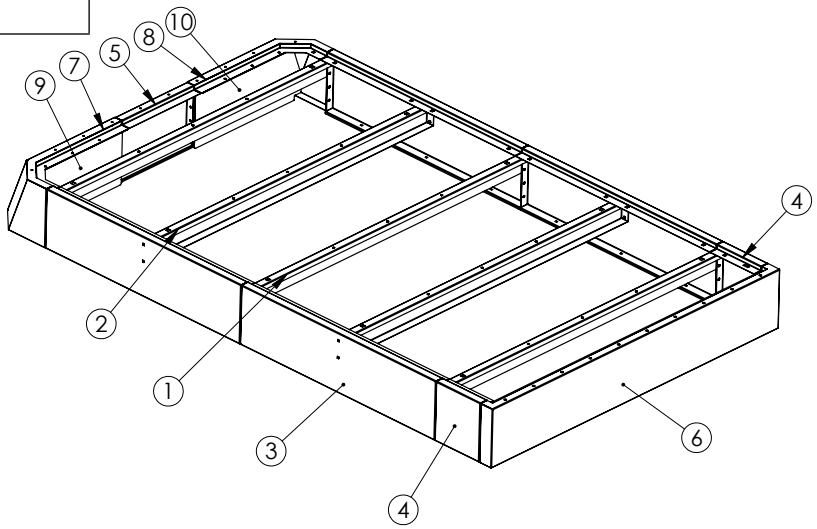

SIDE EXTENSION LION 8 LONG → 10 SHORT + 350 mm - H50285

Item	Qty	Part no.	Description
1	3	H49726	Joint crossing bracket
2	3	H49238	Crossing bracket
3	4	H50060	Short side extension plate
4	1	H50062	Rear extension plate
5	1	H50063	Front extension plate
6	1	H50064	Left corner bracket
7	1	H50065	Right corner bracket
8	1	H50094	Cover plate left
9	1	H50095	Cover plate right
10	2	H50286	Short side extension plate

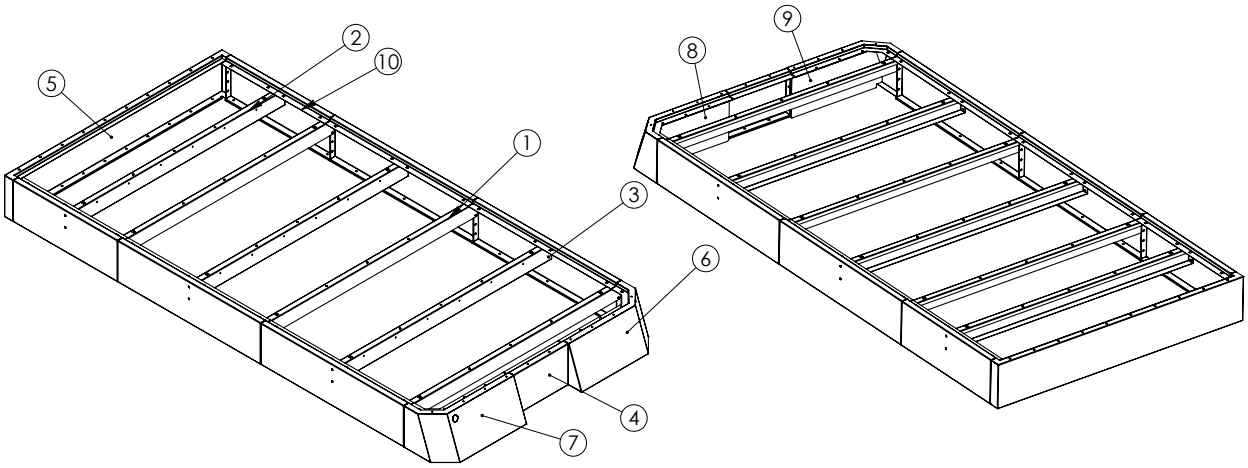

SIDE EXTENSION LION 9 → 10 LONG + 175 mm - H49881

Item	Qty	Part no.	Description
1	4	H49726	Joint crossing bracket
2	3	H49238	Crossing bracket
3	6	H50072	Short side extension plate
4	2	H50073	Short side front extension plate
5	1	H50074	Rear extension plate
6	1	H50075	Front extension plate
7	1	H50076	Left corner bracket
8	1	H50077	Right corner bracket
9	1	H50096	Cover plate left
10	1	H50097	Cover plate right

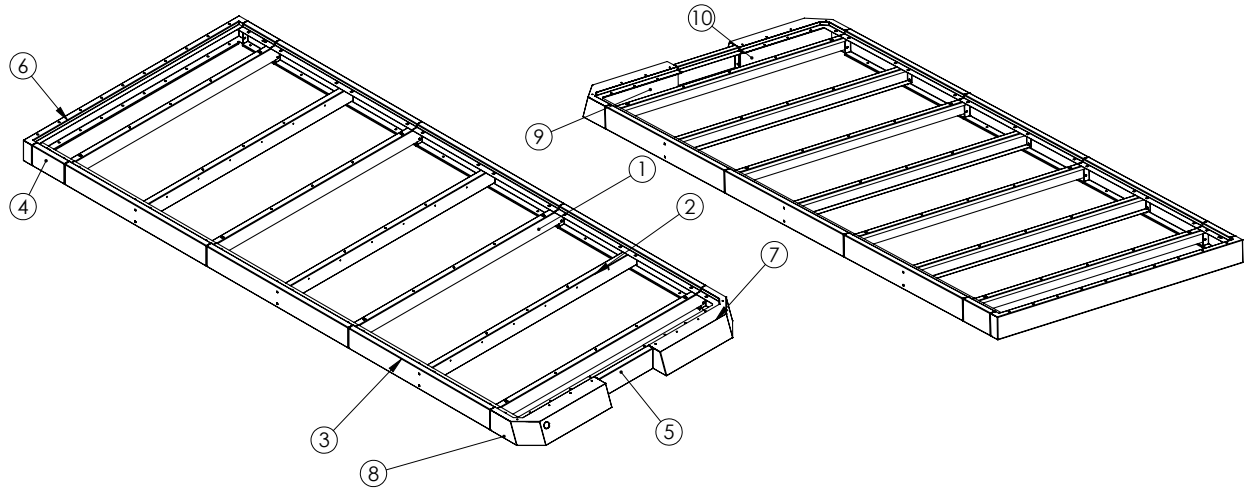

SIDE EXTENSION LION 9 → 12 + 350 mm - H49233

Item	Qty	Part no.	Description
1	4	H49726	Joint crossing bracket
2	3	H49238	Crossing bracket
3	6	H50060	Short side extension plate
4	2	H50061	Short side front extension plate
5	1	H50062	Rear extension plate
6	1	H50063	Front extension plate
7	1	H50064	Left corner bracket
8	1	H50065	Right corner bracket
9	1	H50094	Cover plate left
10	1	H50095	Cover plate right

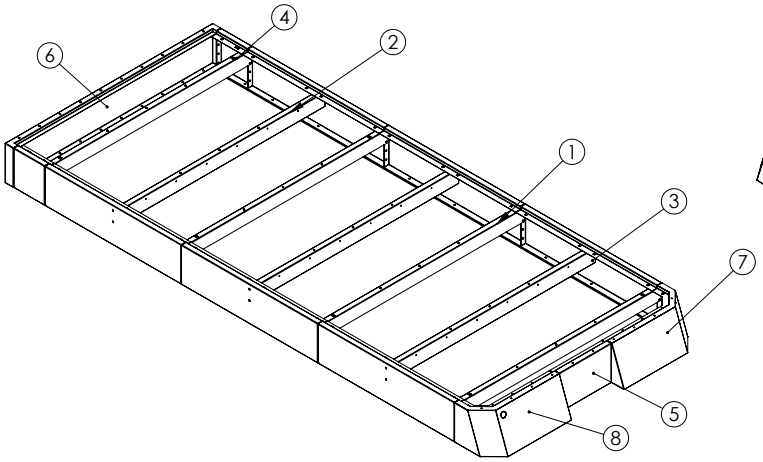

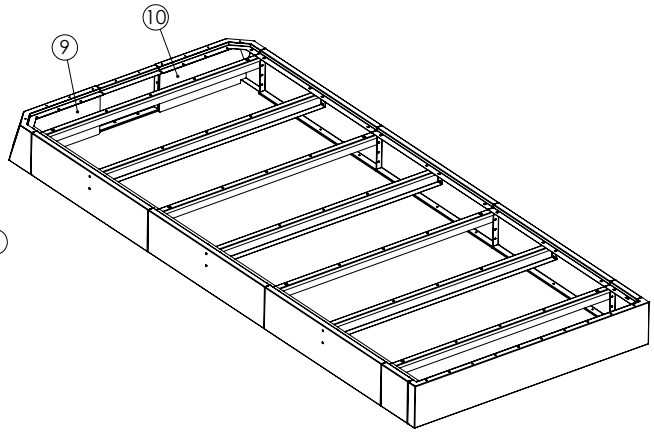

PRE-ASSEMBLED 2 SECTION HYDRAULIC VALVE, 12V - H46297
24V - H51565

Item	Qty	Part no.	Description
1	1	H51520	Valve bracket
2	1	H29924	Proportional valve 2 section, 12V
	1	H49295	Proportional valve 2 section, 24V
3	2	HH14784	Bulkhead straight adapter G1/2” → G1/2”
4	2	HH14446	BSP Adapter
5	6	HH13010	Bonded seal
6	1	HH14448	Straight adapter
7	1	HH14447	Adaptor Straight G 1/2” male → G 5/8” male
8	1	HH15838	Pressure gauge adapter M16x2 - R1/4”
9	1	HH14912	Plug 1/2”

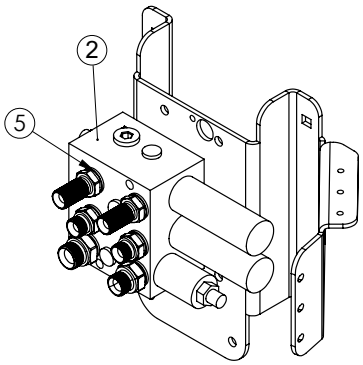

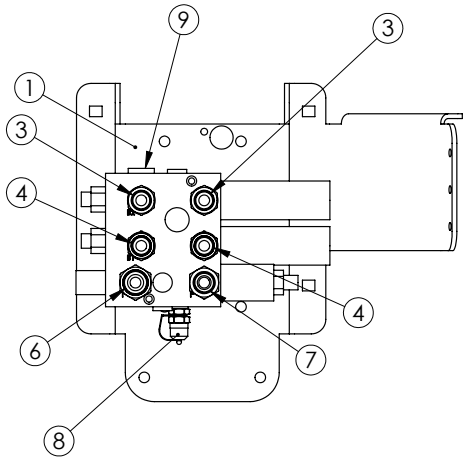

PRE-ASSEMBLED 3 SECTION HYDRAULIC VALVE, 12V - H51310
24V - H51311

Item	Qty	Part no.	Description
1	1	H49630	Full flow sharing sectional valve 3-S 12V
	1	H49631	Full flow sharing sectional valve 3-S 24V
3	1	H51520	Valve bracket
4	3	H46041	Joint End
5	3	H46044	Machined adjuster
6	3	H46042	Star knob F M6
7	3	H46045	Threaded bar M6 x 140
8	3	H46043	Threaded bar M8 x 50
9	12	HF19494	Nut
10	3	HF12898	ISO 7380 M8x30 10.9Zn
11	6	HF10491	Washer DIN 125 M6 A4
12	1	HH14453	Straight BSP adapter 3/4"→ 1"
13	1	HH14452	Straight BSP adapter 3/4"→ 3/4"
14	4	HH14446	BSP Adapter
15	2	HH14442	Male reducer 3/8-1/2
16	1	HH14438	Adaptor Straight G 1/4" male → G 3/8" male
17	2	HH13012	Bonded seal
18	6	HH13010	Bonded seal
19	1	HH13009	Bonded seal

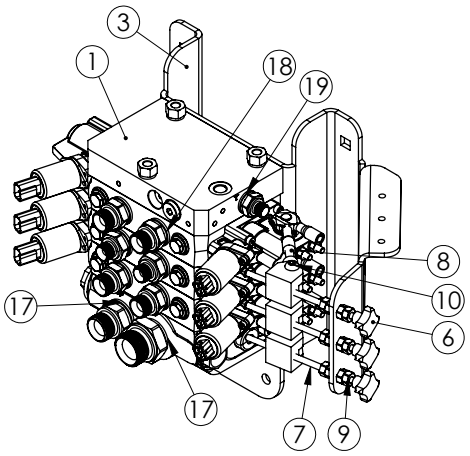

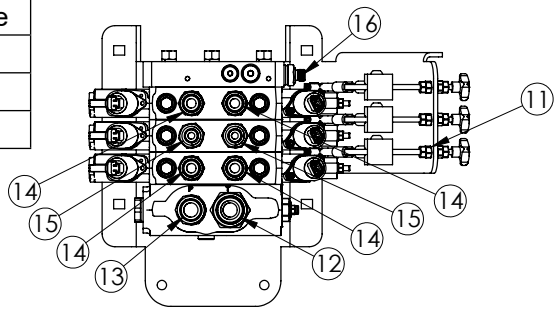

PRE-ASSEMBLED 4 SECTION HYDRAULIC VALVE, 12V - H51224
24V - H46138

Item	Qty	Part no.	Description
1	1	H49632	Full flow sharing sectional valve 4-S 12V
	1	H49633	Full flow sharing sectional valve 4-S 24V
3	4	H46043	Threaded bar m8 x 50
4	4	H46041	Joint End
5	4	H46044	Machined adjuster
6	4	HF12898	ISO 7380 M8x30 10.9Zn
7	4	H46045	Threaded bar m6 x 140
8	16	HF19494	Nut DIN 934 A4 M6
9	8	HF10491	Washer DIN 125 M6 A4
10	4	H46042	Star knob F M6
11	8	HH13010	Bonded seal
12	4	HH14784	Bulkhead straight adapter G1/2" → G1/2"
13	4	HH14446	BSP Adapter
14	1	H47106	Valve bracket
15	1	HH14453	Straight BSP adapter 3/4" → 1"
16	1	HH14452	Straight BSP adapter 3/4" → 3/4"
17	2	HH13012	R 3/4" rubber steel washer

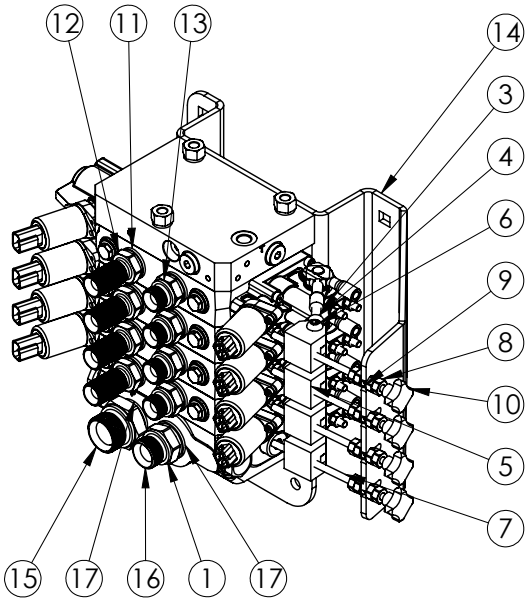

FLIP DOWN LADDER (OPTIONAL) - H50890

NOTE: Current production model

Item	Qty	Part no.	Description
1	1	H50693	Upper stair frame welded
2	1	H50690	Lower stair frame
3	1	H50790	U pipe
4	1	H50791	1:st step
5	4	H50795	2:nd step
6	1	H50799	6:th step
7	3	H50803	7:th step
8	2	H45605	Handrail welded
9	1	H50807	Pipe
10	4	H45595	Pull spring
11	1	H45599	Chain spring bracket
12	1	H45610	Plate
13	2	H45598	Chain
14	4	H45596	Chain sprocket
15	4	H45597	Chain lock
16	2	H26730	Index plunger
17	8	HF10482	Washer DIN 125 A4 M16
18	8	HF10506	Lock nut DIN985 A4 M16
19	6	HF19567	Bolt DIN 912 A4 M16x55
20	2	H50891	Distance bush
21	2	HF10398	Bolt DIN 912 A4 M16x30
22	36	HF10935	Bolt DIN 603 A4 M8x20
23	36	HF19405	Flange nyloc A4 M8
24	4	HF10479	Washer DIN 125 M10 A4
25	4	HF12895	ISO 7380 M8x16 10.9Zn
26	4	HF10502	DIN 127B M8 A4
27	2	H51079	End cover
28	2	HF19570	Bolt DIN 912 A4-80 M10x45

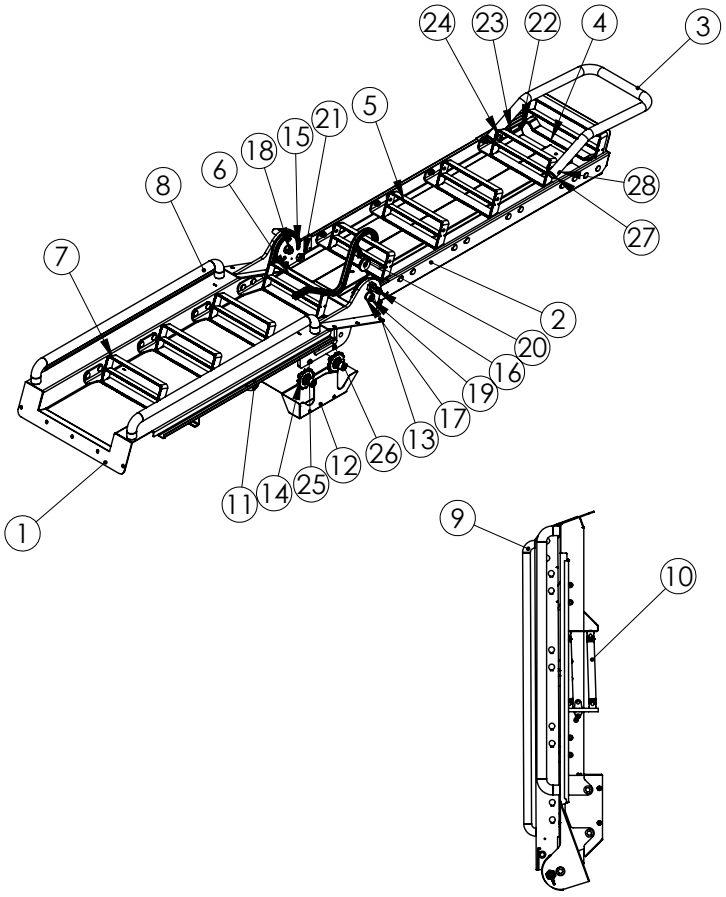

FLIP DOWN LADDER (OPTIONAL) - H45592

NOTE: Non-current production model

Item	Qty	Part no.	Description
1	1	H45615	Upper stair frame welded
2	9	H45611	Anti slip step welded
3	2	H45602	Step guide
4	1	H45622	Lower stair frame welded
5	2	H45603	Step guide
6	2	H45604	Step guide
7	1	H45609	Chain cover welded
8	1	H26730	Index plunger
9	4	H45595	Pull spring
10	1	H45599	Chain spring bracket
11	2	H45605	Handrail welded
12	2	H45598	Chain
13	4	H45596	Chain sprocket
14	4	H45597	Chain lock

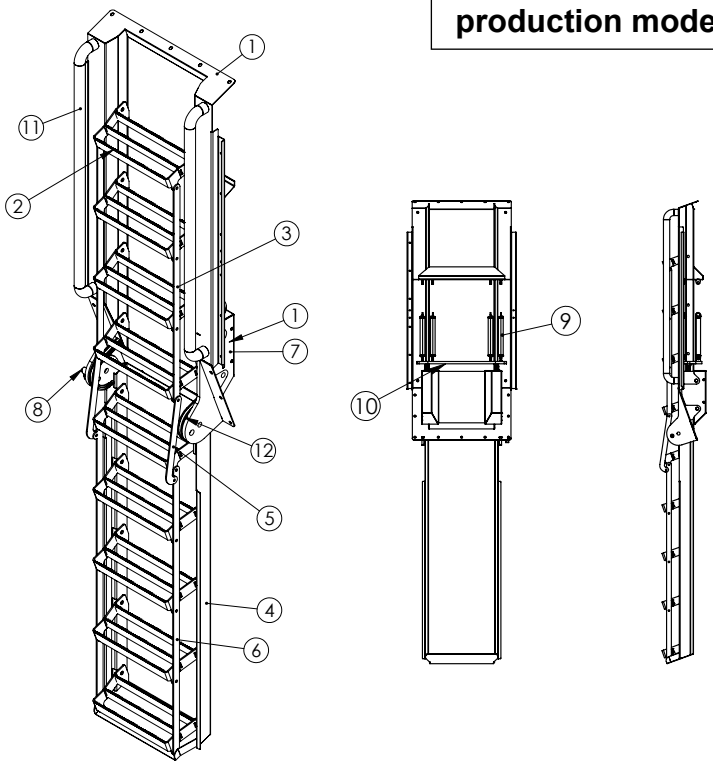

DUAL SPRAY BAR ASSEMBLY (OPTIONAL) - H52550

NOTE: Current production model

Item	Qty	Part no.	Description
1	1	H52551	Spray bar bracket
2	1	H52552	Fastening bracket
3	2	H52558	2 side nozzle pre-assembly
4	2	H52559	4 side nozzle pre-assembly
5	4	H52560	Spoon nozzle pre-assembly
6	1	H52564	Locking pin Ø15
7	1	H28829	Linch pin SS 4,5 mm

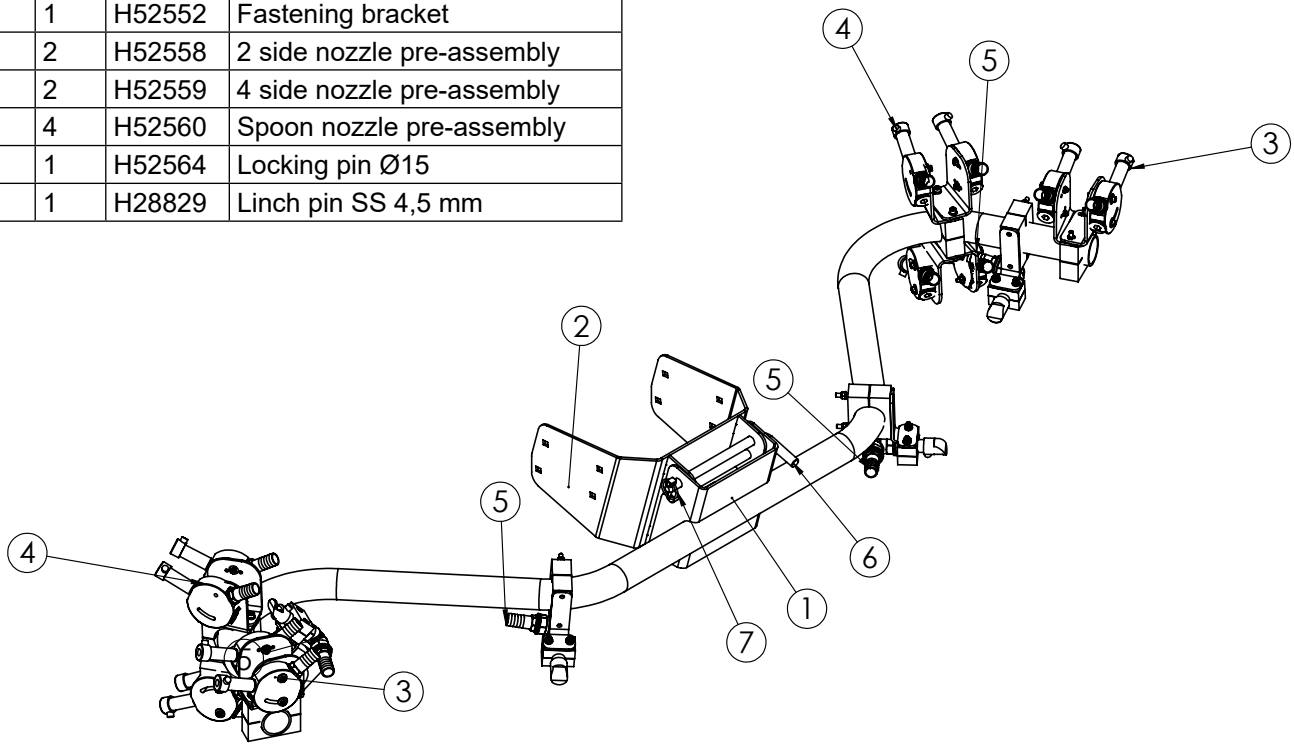

DUAL SPRAY BAR ASSEMBLY (OPTIONAL) - H46627

NOTE: Non-current production model

Item	Qty	Part no.	Description
1	2	H48903	Side spray assembly 4 pc
2	2	H48904	Side spray assembly 2 pc
3	1	H46560	Left spray bar frame
4	1	H46563	Right spray bar frame
5	2	H46554	Spray bar holder
6	2	H46557	Spray bar lock bracket
7	13	H45632	Single stream nozzle
8	4	H45631	Flood nozzle

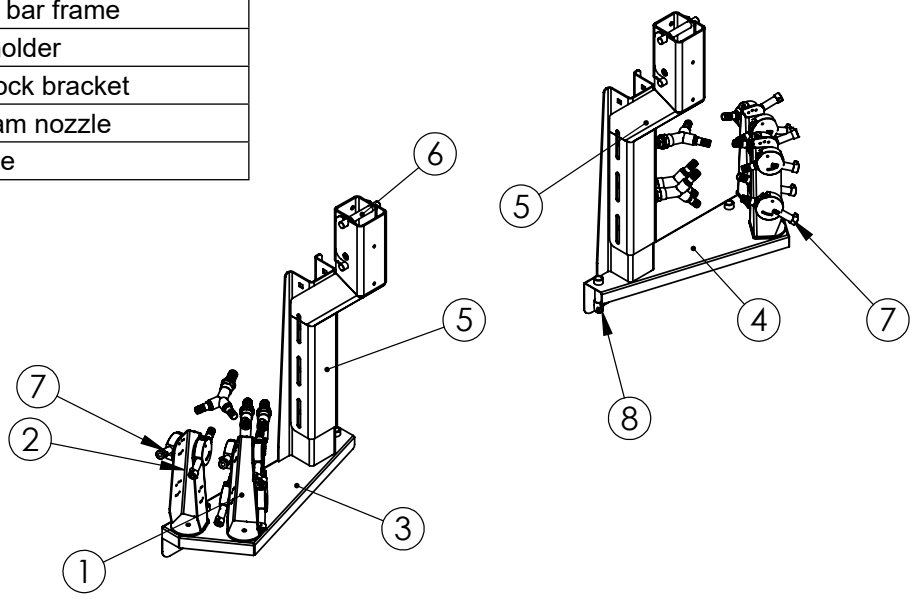

SLURRY KIT (OPTIONAL) - H49608

Item	Qty	Part no.	Description
1	1	H49540	Spray pipe slurry
2	1	H49619	Pre-assembled slurry system

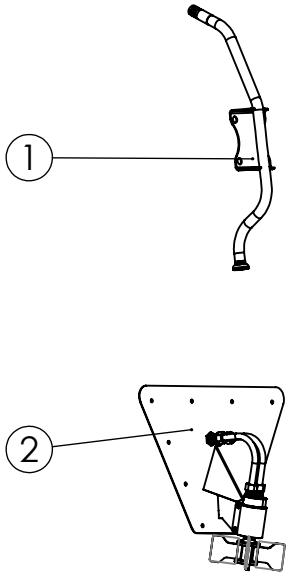

HAND RAIL KIT LEFT (OPTIONAL) - H46320

Item	Qty	Part no.	Description
1	4	HH13262	Pipe clamp PLK 635 PP
2	1	H45881	Plate
3	1	H45879	Pipe
4	2	H45887	Pull bar pre-assembly
5	1	H45870	Rail lift pipe
6	1	H45874	Rail bracket left
7	1	H45788	Rail axle
8	1	H45882	Plate

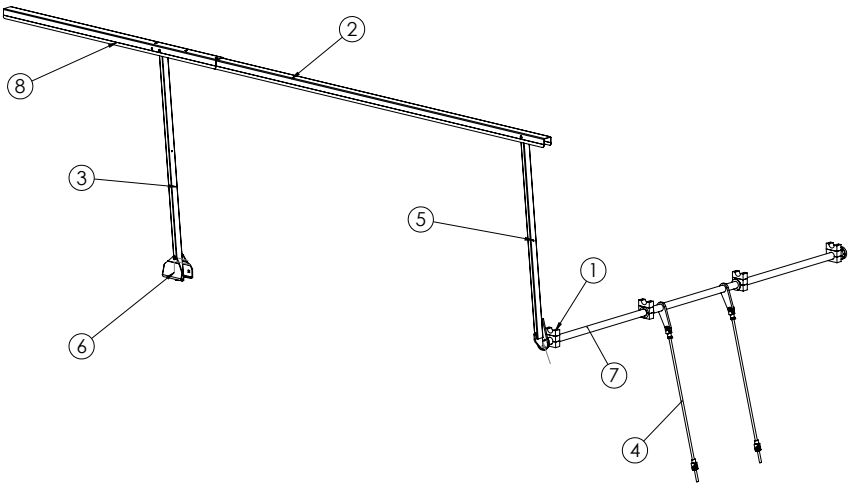

HAND RAIL KIT RIGHT (OPTIONAL) - H46321

Item	Qty	Part no.	Description
1	1	H45870	Rail lift pipe
2	1	H45877	Rail bracket right
3	1	H45879	Pipe
4	1	H45881	Plate
5	1	H45882	Plate
6	2	H45887	Pull bar pre-assembly
7	1	H45788	Rail axle
8	12	HH13262	Pipe clamp PLK 635 PP

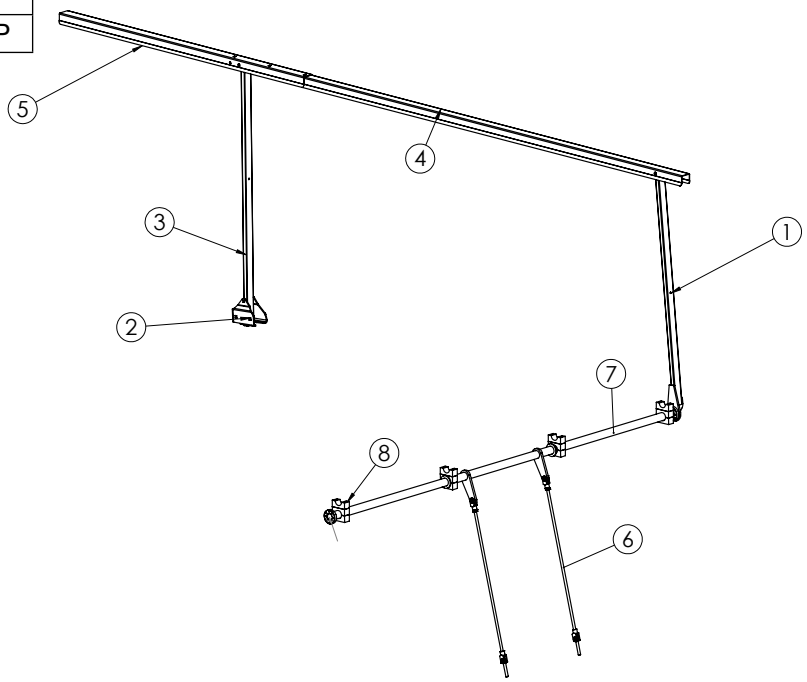

ADDITIONAL FRONT TANKS

Part no.	Description
H42988	1250 L
H49600	2500 L
H50232	3000 L

ELECTRICAL HARNESSES & AUX IO MODULE

Part no.	Description
H31052	24V Lion DC conveyor module to accessories harness
H31154	24V Lion AC conveyor module to accessories harness
H31355	24V Lion AC dual auger module to accessories harness
H31053	24V Lion module to accessories pre-wet option
H31367	Hydraulic Lion conveyor module to accessories harness
H31368	Hydraulic Lion dual auger module to accessories harness
H31369	Hydraulic Lion module to accessories pre-wet option
H31094	Aux IO module
H31147	Aux IO module harness
H31124	Spray bar harness part spray bar valve
H31125	Spray bar harness part L1, L2 & L3 valve
H31126	Spray bar harness part R1, R2 & R3 valve
H31127	Spray bar harness part flow sensor harness
H31149	Aux IO part CAN 2
H31150	Aux IO part TempStriker™
H31151	Aux IO part Canopy
H31152	Aux IO part Slurry
H31157	Aux IO part hydraulic chute lift harness
H31158	Aux IO part dual auger harness
H31159	Aux IO part chute position harness
H31265	Aux IO part dual auger hydraulic ENC
H31266	Aux IO part canopy button harness
H31267	Aux IO part chute button
H31268	Aux IO part chute position sensor assembly
H31280	Aux IO part ENC pump hydraulic
H31141	Inverter harness terminated (120ohm)
H31322	Inverter harness dual auger 1
H31323	Inverter harness dual auger 2
H31133	LION secondary power harness – vehicle side
H31134	Lion secondary power harness – spreader side
H31135	Lion power harness – spreader side
H31379	Lion secondary power harness spreader side (front)
H31089	DC/DC converter 12V 120W assembly

CONNECTORS

Item	Qty	Part no.	Description
1	1	H30151	Vehicle side harness connector
2	1	H30152	Terminal kit (8 pcs 0,5mm²)
3	1	H30145	Insert module
4	1	H25796	Insert module
5	1	H25763	Carrier frame
6	1	H25764	Cable gland
7	1	H25803	Cover
8	1	H25765	Housing
9	2	H30578	Double locking latch

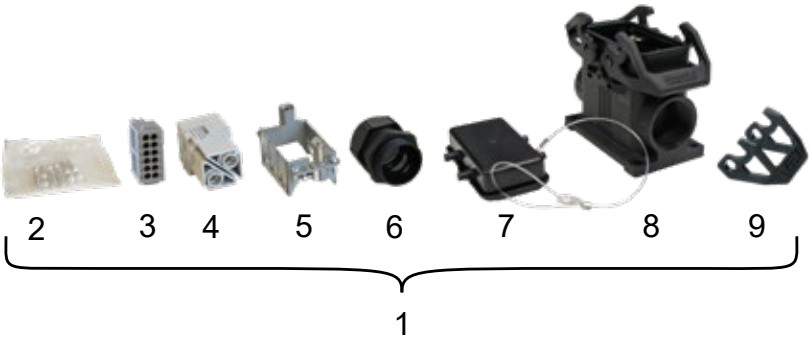

10	1	H26129	Fuse holder midval small
11	1	H22885	Fuse midval 125 A, pink
12	2	H24273	Connector 5mm 25 mm²

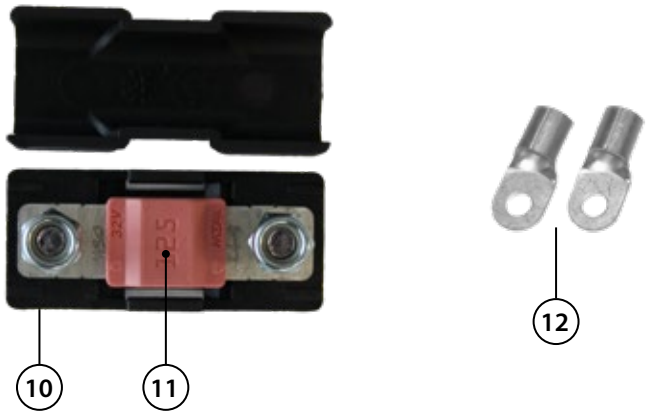

Item	Qty	Part no.	Description
1	1	H30150	Spreader side harness connector
2	1	H30153	Terminal kit (8 pcs 1,0 mm²)
3	1	H26625	Insert module
4	1	H25759	Carrier frame
5	1	H25800	Insert module
6	1	H25760	Cable gland
7	1	H25828	Housing

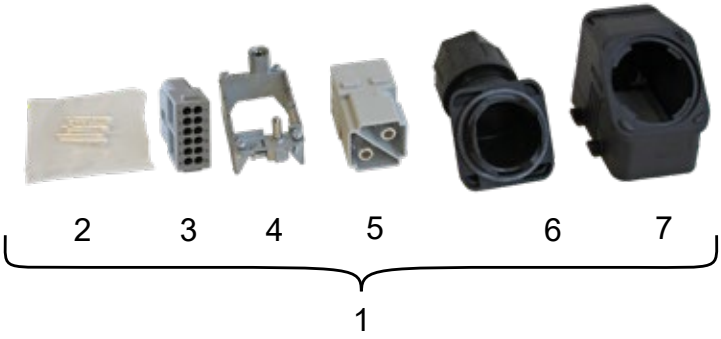

Item	Qty	Part no.	Description
1	1	H25766	Spreader side harness connector holder



Item	Qty	Part no.	Description
1	1	H22305	Protective cap ATP
2	1	H22304	Protective cap AT
3	1	H22168	Sealing Cap female



Item	Qty	Part no.	Description
1	1	H23366	DT connector kit 1mm²
2	1	H21879	Receptacle, 2-Way
3	1	H21877	Plug, 2-way
4	20*	H21883	Male Contact - Pin 0,823-1,31mm²
5	20*	H21881	Female Contact - Socket 0,823-1,31mm²
6	1	H21878	Wedge lock Plug, 2-Way
7	1	H21880	Wedge lock Recep., 2-Way

**minimum order quantity: 20 pcs*

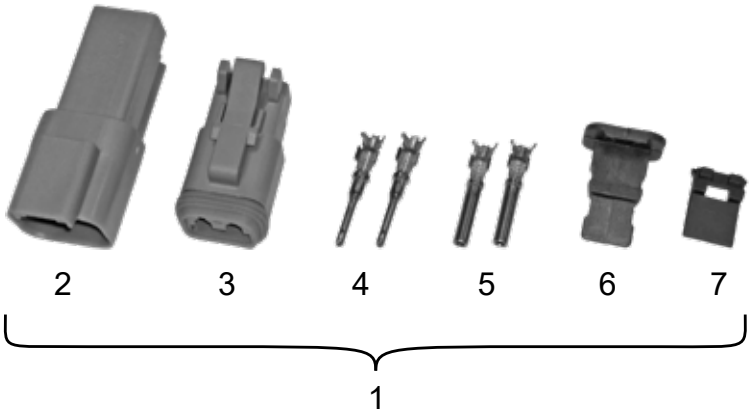

Item	*Qty*	*Part no.*	*Description*
1	1	H23368	DTP Connector kit
2	1	H21888	Plug, 2-way
3	1	H21886	Receptacle, 2-Way
4	1	H21889	Wedge lock Plug, 2-Way
5	1	H21887	Wedge lock Recep.,2-Way
6	20*	H21884	Female Contact - Socket 2,08-3,31 mm²
7	20*	H21885	Male Contact - Pin 2,08-3,31mm²

**minimum order quantity: 20 pcs*

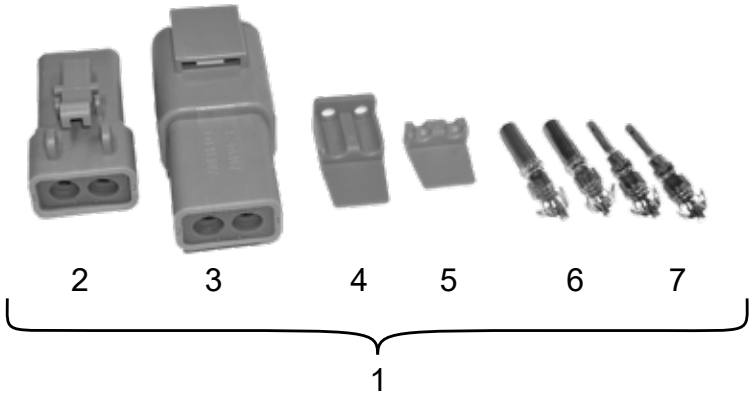

Item	Qty	Part no.	Description
1	1	H30154	Connector Kit, DT 6-way Male
2	1	H30125	Receptacle, 6-Way
3	1	H30128	Wedge lock recep., 6-Way
4	20*	H21883	Male Contact - Pin 0,823-1,31mm

**minimum order quantity: 20 pcs*

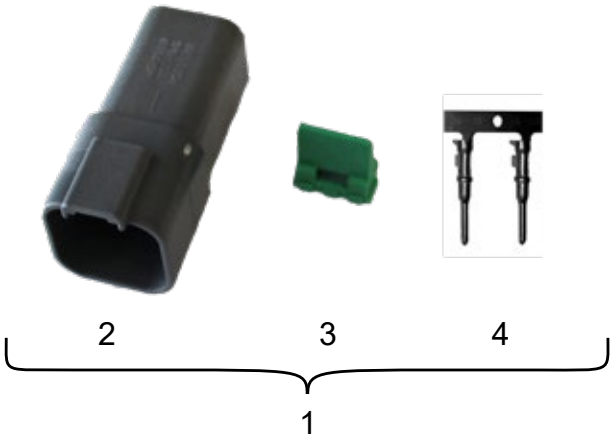

Item	Qty	Part no.	Description
1	1	H30155	Connector Kit, DT 6-way Female
2	1	H25941	Plug, 6-way
3	1	H25942	Wedge lock Plug, 6-Way
4	20*	H21881	Female Contact - Socket 0,823-1,31mm

**minimum order quantity: 20 pcs*

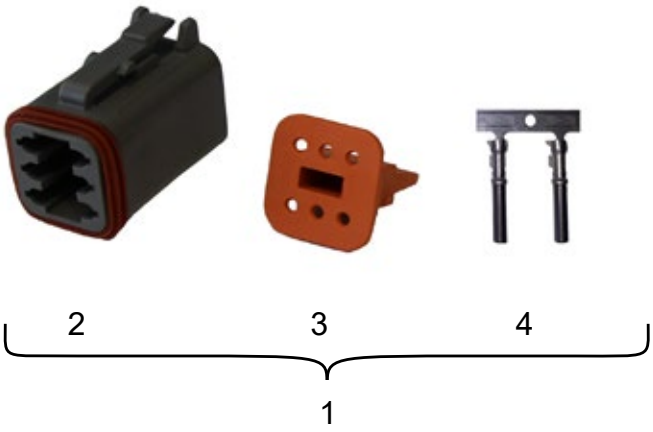

Item	Qty	Part no.	Description
1	1	H23369	IO module connector kit
2	1	H21955	Connector Housing AMPSEAL 35 pin
3	20	H21956	Female Contact - Socket

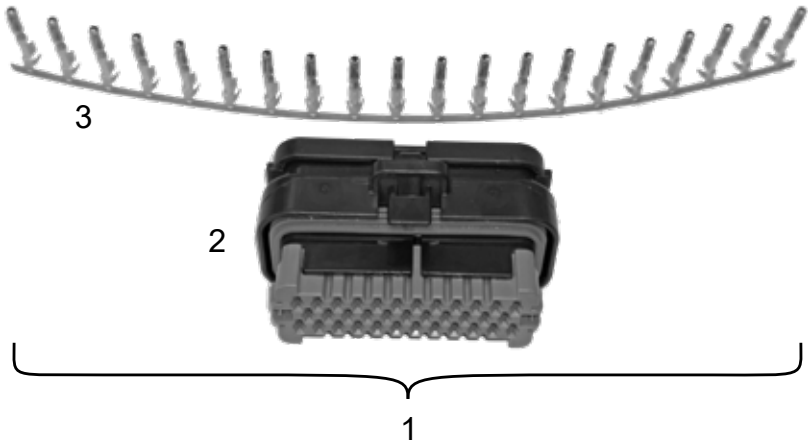

Item	Qty	Part no.	Description
1	1	H23370	Rear lights connector kit
2	1	H21910	Receptacle, 4-Way
3	1	H21908	Plug, 4-Way
4	1	H21911	Wedge lock Recep., 4-Way
5	1	H21909	Wedge lock Plug, 4-Way
6	20*	H21883	Male Contact - Pin 0,823-1,31mm^2
7	20*	H21881	Female Contact - Socket 0,823-1,31mm^2

**minimum order quantity: 20 pcs*

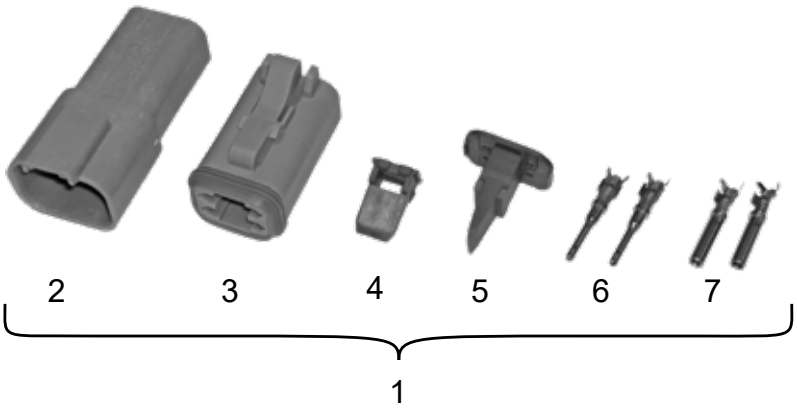

Item	Qty	Part no.	Description
1	1	H23529	Dielectric grease, 50g



Item	Qty	Part no.	Description
1	1	H21935	Connector for spinner, 8 mm 4 mm^2
2	1	H21953	Connector for auger/ conveyor, 8 mm 16 mm^2
3	1	H24274	Connector for vehicle side, 10 mm 25 mm^2
4	1	H24207	Connector for spreader module 8 mm 25 mm^2
5	1	H24273	Connector for fuse holder, 5 mm 25 mm^2

1



2



3



4



5





Oy Hilltip Ab
Pukkisaarentie 6
68600 Pietarsaari
Finland

www.hilltip.com
info@hilltip.com

Construction, specifications and other details are subject to change without notice.